TEUPEN®

...access redefined

Serial number: _____

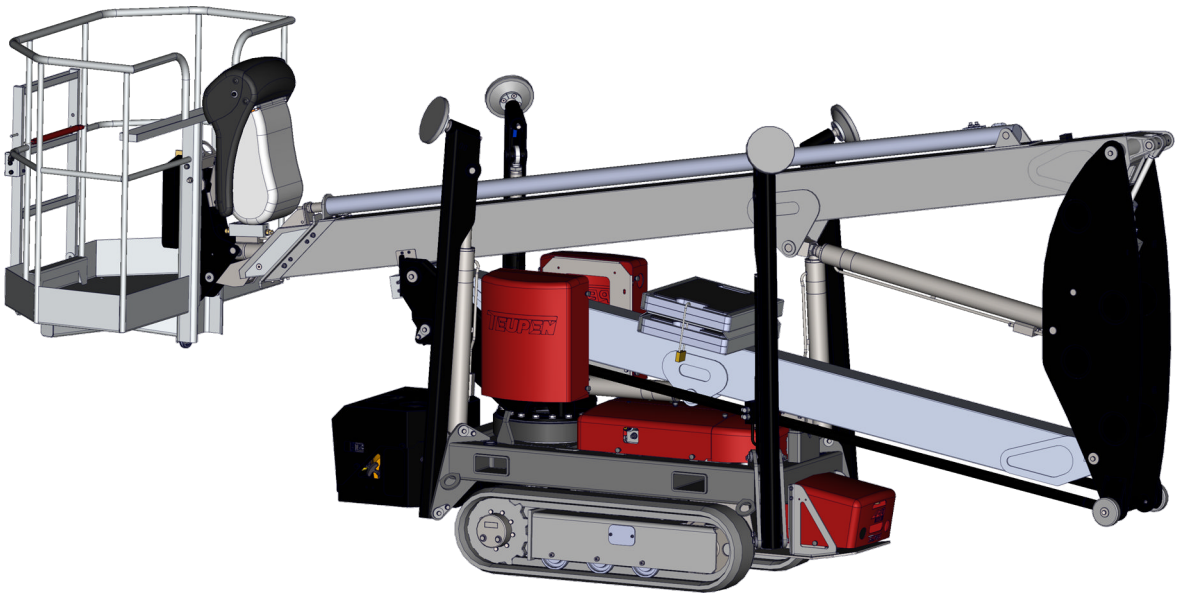

Translation of the original operating instructions

LEO 15 GT

Aerial access platform

Leo15GT 2012_GB

Manufacturer:
TEUPEN Maschinenbau GmbH
Marie-Curie-Straße 13
D-48599 Gronau
Telephone: +49 (0) 2562 8161-0
Fax: +49 (0) 2562 8161-888
email: info@teupen.com
Internet: www.teupen.com

Service:
Telephone: +49 (0) 2562 8161-313
email: service@teupen.com

Table of contents

Table of contents

Table of contents

Table of contents

1 General

1.1 Information about these instructions

These instructions enable the safe and efficient handling of the machine. These instructions are a component of the machine and must be kept in the immediate vicinity of the machine so that they are accessible to the personnel at any time.

Before beginning any work, the trained personnel must have read through these instructions carefully and understood them. The basic requirement for safe working is adherence to all the specified safety instructions and operating instructions in these instructions.

In addition, the local accident prevention regulations and general safety provisions for the area of application of the machine apply.

Figures in these instructions serve the purpose of basic understanding and can deviate from the actual model.

1.2 Explanation of symbols

Safety instructions

Safety instructions are marked with symbols in these instructions. The safety instructions are always introduced by signal words which express the extent of the danger.

DANGER!
This combination of symbol and signal word indicates an immediately-dangerous situation which will cause death or severe injuries if not avoided.

WARNING!
This combination of symbol and signal word indicates a possibly-dangerous situation which could cause death or severe injuries if it is not avoided.

CAUTION!
This combination of symbol and signal word indicates a possibly-dangerous situation which could cause slight injuries if it is not avoided.

NOTICE!
This combination of symbol and signal word indicates a possibly-dangerous situation which could cause property and environmental damage if it is not avoided.

Tips and recommendations

This symbol highlights useful tips and recommendations as well as information designed to ensure efficient and smooth operation.

Special safety instructions

The following symbols are used in the safety instructions to draw attention to specific dangers:

DANGER!
This combination of symbol and signal word indicates an immediately-dangerous situation due to electric shock. If an instruction so marked is not heeded, severe or even fatal injuries can be the consequence.

Additional markings

To emphasise operating instructions, results, lists, references and other elements, the following markings are used in these instructions:

Marking	Explanation
▶	Step-by-step instructions
⇨	Results of action steps
↳	References to sections of these instructions and to other relevant documents

Marking	Explanation
■	Listing without fixed sequence
[Buttons]	Operating elements (e.g. buttons, switches), display elements (e.g. signal lamps)
'Display'	Screen elements (e.g. buttons, programming of function keys)

1.3 Limitation of liability

All details and instructions in these instructions were compiled taking into account the applicable standards and regulations, the state of technology, as well as our many years of knowledge and experience.

In the following cases, the manufacturer assumes no liability for damage:

- Failure to follow these instructions
- Use deviating from the proper use
- Use of untrained personnel
- Unauthorised changes
- Technical alterations
- Use of non-approved spare parts

For special models, with the usage of additional order options or due to the latest technical changes, the actual scope of delivery can deviate from the explanations and depictions provided here.

Applicable are the obligations agreed upon in the delivery contract, the general terms and conditions, as well as the delivery conditions of the manufacturer and the legal regulations valid at the time the contract was concluded.

1.4 Copyright

1.5 Warranty provisions

The warranty provisions are contained in the manufacturer's general terms and conditions.

1.6 Conditions warranty performance card

In order to be able to process warranty applications between the customer, service partner and Teupen as quickly as possible, it is absolutely necessary to fill out the warranty card which is at the front of the machine record and send it back to Teupen directly after handover of the machine to the customer. If the warranty card is not filled out properly, we cannot process the warranty application since important data which is necessary for the processing has not been made available to us.

Please send the warranty card to:

Teupen Maschinenbau GmbH

Service Point

Marie-Curie-Straße 13

D-48599 Gronau

Sample of a properly filled-out warranty card:

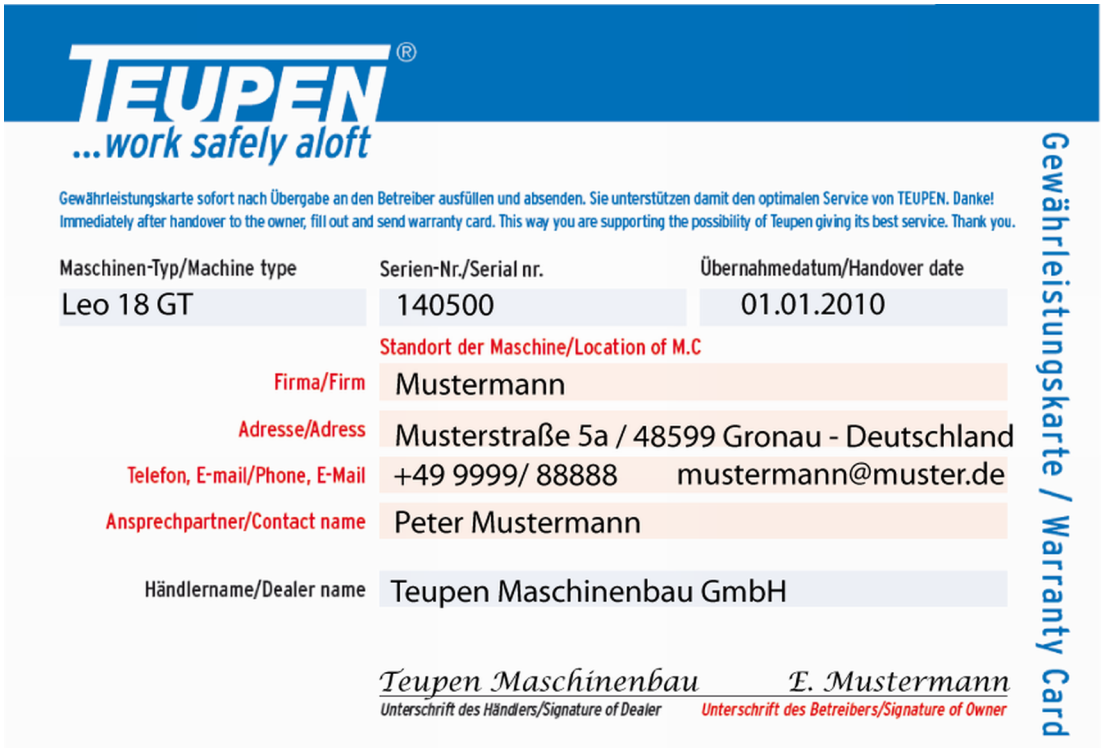

TEUPEN®
...work safely aloft

Gewährleistungskarte sofort nach Übergabe an den Betreiber ausfüllen und absenden. Sie unterstützen damit den optimalen Service von TEUPEN. Danke!
Immediately after handover to the owner, fill out and send warranty card. This way you are supporting the possibility of Teupen giving its best service. Thank you.

Gewährleistungskarte / Warranty Card

Maschinen-Typ/Machine type	Serien-Nr./Serial nr.	Übernahmedatum/Handover date
Leo 18 GT	140500	01.01.2010

Standort der Maschine/Location of M.C

Firma/Firm	Mustermann
Adresse/Adress	Musterstraße 5a / 48599 Gronau - Deutschland
Telefon, E-mail/Phone, E-Mail	+49 9999/ 88888 mustermann@muster.de
Ansprechpartner/Contact name	Peter Mustermann
Händlername/Dealer name	Teupen Maschinenbau GmbH

Teupen Maschinenbau — Unterschrift des Händlers/Signature of Dealer
E. Mustermann — Unterschrift des Betreibers/Signature of Owner

Fig. 1: Sample warranty card

1.7 Customer Service

Our Customer Service is available for technical information. Please see page 2 for the contact data.

In addition, our employees are constantly interested in new information and experiences which arise from usage and could be valuable for the improvement of our products.

2 Safety

This section provides an overview of all safety aspects that are essential to the best possible protection of the personnel and the safe and trouble-free operation of the machine. Additional safety instructions for specific work tasks are contained in the sections regarding the individual life stages of the machine.

2.1 Essential dangers

The following section describes remaining risks which can arise from the machine even with proper use.

In order to reduce risks of personal injury and property damage and avoid dangerous situations, the safety instructions listed here and the safety instructions in the other sections of these instructions must be followed.

2.1.1 General hazards in the workplace

Swivelling aerial access platform

WARNING!

Danger to life due to swivelling aerial access platform!

During operation, the aerial access platform can swivel out. This can cause severe injuries or even death.

- Never step under or into the swivel range of the aerial access platform.
- Only move the aerial access platform under supervision.
- Always operate the aerial access platform with at least two people.
- Always wear personal protective equipment.

Work in high places

WARNING!

Risk of falling!

During work in high places, there is a risk of falling. This can cause severe injuries or even death.

- Always wear a safety harness (acc. to EN 361) when in the working basket and do not swing or move jerk.
- Do not climb onto the safety fence around the basket.
- Make sure that the machine is set up properly and holds securely.
- Make sure that when moving the working basket, no body parts are crushed, e.g. against a wall.
- At wind speeds above 12.5 m/s (wind strength 6 Bft), stop work immediately.
- Always wear personal protective equipment.

Exhaust gases

WARNING!

Danger to life from poisoning or suffocation due to exhaust gas!

When inhaled, exhaust gases can lead to suffocation and cause severe poisoning as well a illness of the respiratory system.

- Always ensure fresh air supply when working on the machine in combustion engine mode.
- Any person inhaling exhaust gas must be provided with fresh air immediately. Consult a physician.

2.1.2 Danger due to electric current

Electric current

DANGER!

Danger to life due to electric current!

Upon contact with voltage-conducting parts, there is an immediate danger to life due to electric shock. Damage to the insulation or individual components can present a danger to life.

- Do not work on or near high-voltage lines.
- Only have qualified electricians perform work on the electrical system.
- In case of damage to the insulation, switch off the voltage supply immediately and have the machine repaired.
- Never bypass fuses or take them out of operation. When changing fuses, adhere to the correct amperage.
- Keep humidity away from voltage-conducting parts. This can cause a short-circuit.
- Adhere to cable strengths according to *'Cable lengths' on page 42*.
- Lay (extension) cables so that they cannot be driven over, they do not come into contact with liquids, they are not sharply nicked or otherwise stressed.
- Keep outlet easily accessible at all times.
- Before performing work on voltage-conducting parts, pull the mains plug.

Batteries

WARNING!

Danger of injury due to incorrect handling of batteries!

In case of batteries are improperly handled, there is the danger that the batteries can explode or that liquids that are hazardous to health can egress from the batteries. The liquid egressing can cause severe burns upon skin contact, severe poisoning upon swallowing and blindness in case it comes in contact with eyes.

- Never short circuit the contacts (positive and negative poles) of the batteries!
- Never use or store batteries in places where the atmosphere is explosive or where temperatures can rise excessively.
- Never attempt to solder batteries, to repair them, to change their form, to remodel them or to dismantle them.
- Always protect batteries from access by unauthorised persons.
- In order to avoid fires, overheating, explosions or escape of fluids, do not subject batteries to heavy vibrations or shocks, place heavy weights on them or subject them to other damaging exposures. Liquids which emanate from batteries can get inflamed.
- Avoid contact with escaping liquids.

Measures to be undertaken upon contact with battery liquids:

- Wash skin with plenty of water and soap after contact.
- Rinse out with clear water under the eyelids for at least 15 minutes after contact. While doing so, do not direct the stream of water directly on the eyes and do not rub. Immediately summon medical assistance.

2.1.3 Danger due to mechanical elements

Falling materials

WARNING!

Danger of injury due to falling materials!

During operation, material can fall down uncontrolled and cause severe injuries.

- Make others aware of the danger zone and block off the area.
- Do not enter the danger zone during normal operation.
- Never place objects on the working basket safety fence.

Supports and arms

WARNING!

Danger of crushing on supports and arms!

When bracing or swivelling the machine, there is a danger of crushing.

- Make sure that when bracing, no people, supply lines or other objects are in the area around the supports.
- Make sure that no people are in the danger zone when swivelling the machine.
- Make sure that no people are in the danger zone when moving into transport position.

Insufficient stability

WARNING!

Danger of injury due to insufficient stability!

With insufficient stability, there is a danger that the machine will tip. This can cause severe injuries or even death.

- Make sure that the ground has sufficient load capacity (*Chapter 3 'Technical data' on page 39*).
- Do not exceed the maximum slope (*Chapter 3 'Technical data' on page 39*).

Crawler chassis

WARNING!

Danger of injury due to driving over body parts!

With the crawler chassis, there is a danger of pinching off body parts and thus causing severe to fatal injuries.

- During operation, do not reach into running chains or chain wheels.
- During operation, maintain a sufficient safety distance.
- Pay attention to the change of direction.
- Do not drive over power lines.

2.1.4 Danger due to hydraulic energies

Hydraulics

WARNING!

Danger to life from hydraulic forces!

Hydraulically driven moving parts can cause grave injuries.

- Work on the hydraulic system must only be carried out by trained hydraulics technicians.
- Before starting work on the hydraulic system, ensure that it has been completely depressurised. The pressure accumulator must be completely relieved.
- During operation, do not reach into or handle moving parts.
- Do not open covers during operation.
- When in the danger zone, wear close-fitting protective work clothing with low tear strength.

2.1.5 Dangers due to high temperatures

Hot surfaces

WARNING!

Danger of injury due to hot surfaces!

Surfaces of engine components can get heated up considerably during operation. Skin contact with hot surfaces causes severe burns to the skin.

– Avoid contact with engine components such as exhaust components, silencers, coolers, radiators, pipes and engine blocks.
– Check before all work on engine components, as to whether these are hot. If necessary, allow them to cool.

2.1.6 Danger due to chemicals

Anti freeze agents

WARNING!

Health danger of anti freeze agents

The coolant of the diesel engine consists of a mixture of water and anti freeze agent. In case of body contact, swallowing or inhalation of aerosols, anti freeze agents can lead to severe health hazards.

– Avoid contact with anti freeze materials.
– Do not eat, drink or smoke while handling anti freeze materials. Wash hands before breaks and at the end of work.
– Always wear protective gloves while working with anti freeze agents.

Measures to be undertaken upon contact with anti freeze agents:

- Wash skin with plenty of water after contact.
- Rinse eyes thoroughly with water for at least 15 minutes and call a doctor.
- Rinse out mouth after swallowing and drink plenty of water afterwards. Summon a doctor.
- In case aerosols are inhaled, go out into fresh air.

Engine oil

WARNING!

Danger of injury through engine oil!

Engine oil contains poisonous substances which can cause inflammations and / or are carcinogenic.

– Avoid all skin contact with engine oil.
– In case of accidental skin contact, wash the hands or affected area immediately with soap. Do not ever use petrol, gasoline, solvents or other chemical cleaning agents.

2.1.7 Danger due to traffic and vehicles

Public street traffic

WARNING!

Danger to life due to parts protruding into the traffic area!

A failure to heed flowing traffic can cause accidents with the most severe injuries or even death.

– Secure the danger zone around the aerial access platform completely and visibly (even in case of poor visual conditions).
– Always be prepared for possible traffic accidents, especially such kind as can be caused by third parties.

2.2 Proper use

The machine is designed and constructed exclusively for the proper use described here.

The machine is to be used exclusively to convey people and tools up to the maximum allowable working basket load to perform work in high places.

Proper use also includes adherence to all details in these instructions.

Any use beyond or differing from the proper use counts as a misuse.

WARNING!

Danger due to misuse!

Misuse of the aerial access platform can create dangerous situations.

- Do not use the aerial access platform to support loads.
- Do not use the aerial access platform as a crane, lift or side pull.
- Do not use the aerial access platform in or near unprotected active parts of electrical systems.
- Do not operate the aerial access platform in an atmosphere subject to explosion.

Claims of any type due to damage from misuse are excluded.

2.3 Responsibility of the owner

Owner

The term 'owner' refers to the person who himself operates the machine for trade or commercial purposes, or who surrenders the machine to a third party for use/application, and who bears the legal product liability for protecting the user, the personnel or third parties during the operation.

Duties of the owner

The machine is used in the commercial realm. Therefore, the owner of the machine is subject to the legal obligations relating to occupational safety.

In addition to the safety instructions in these instructions, the valid safety, accident prevention and environmental protection regulations applicable to the machine's area of application must be adhered to.

Here, the following points apply in particular:

- The owner must inform himself about the applicable occupational safety provisions and also determine in a risk assessment the risks which arise due to the specific working conditions in the place where the machine is used. He must implement these in the form of operating instructions for the operation of the machine.
- The owner must check during the entire time the machine is used whether the operating instructions he has created correspond to the current state of regulations; if necessary, he must adapt the operating instructions.
- The owner must clearly regulate and specify the responsibilities for installation, operation, fault repair, maintenance and cleaning.
- The owner must ensure that all employees who handle the machine have read and understood these instructions. In addition, the personnel must be trained by the owner and informed about the risks.
- The owner must provide the required protective equipment and ensure that the personnel wears the required protective equipment.

Furthermore, the owner is responsible for ensuring that the machine is always in technically-perfect condition. Therefore, the following points apply:

- The owner must ensure that the maintenance intervals described in these instructions are adhered to.
- The owner must check all safety equipment for perfect function before each commissioning or have it checked by an authorised person.

2.4 Personnel requirements

2.4.1 Qualifications

WARNING!

Danger of injury in case of insufficient qualification of the personnel!

If unqualified personnel undertakes work on the machine or is in the machine's danger zone, dangers arise which can cause severe injuries and significant property damage.

– Only have all activities performed by qualified personnel.
– Keep unqualified personnel away from the danger zones.

In these instructions, the qualifications listed below are named for the personnel for the various areas of activity:

Expert
An expert is somebody who, based on his professional training and experience, has sufficient knowledge of aerial platforms and is sufficiently familiar with the applicable state regulations, accident prevention regulations and generally-recognised rules of technology (e.g. employer's liability insurance rules, DIN standards, VDE regulations, technical rules of other member states of the European Union or other treaty states of the agreement about the European Economic Community) that he can assess the safe operational state of aerial platforms.

Hydraulics Specialist
The Hydraulics Specialist is trained for the special area of responsibility he is involved with and knows the relevant standards and regulations.

Based on his technical training and experience, the Hydraulics Specialist can perform work on hydraulic systems and can recognise and avoid potential hazards himself.

Qualified Electrician
Based on his technical training, knowledge, experience and knowledge of the applicable standards and regulations, the Qualified Electrician is able to perform work on electrical systems and recognise and avoid potential hazards himself.

The Qualified Electrician is specially trained for the area of responsibility he is involved with and knows the relevant standards and regulations.

The Qualified Electrician must comply with the requirements of the applicable legal regulations for accident prevention.

Qualified personnel
Qualified personnel is able to carry out assigned work and to recognize and prevent possible dangers self-reliantly due to its professional training, knowledge and experience as well as profound knowledge of applicable regulations.

Trained people
The trained people have been trained in demonstrable fashion in a training session by the owner about the proper use without additional prior knowledge of the method of functioning and possible hazards which can arise from the aerial access platform.

Personnel may only include people who are at least 18 years of age and of whom it can be expected that they perform their work reliably. People whose reactions are influenced, e.g. by drugs, alcohol or medications, are not permitted.

2.4.2 Unauthorised persons

WARNING!

Risk to life for unauthorised persons due to hazards in the danger and working zone!

Unauthorised persons who do not meet the requirements described here will not be familiar with the dangers in the working zone. Therefore, unauthorised persons face the risk of serious injury or death.

- Unauthorised persons must be kept away from the danger and working zone.
- If in doubt, address the persons in question and ask them to leave the danger and working zone.
- Cease work while unauthorised persons are in the danger and working zone.

2.4.3 Training

The customer has been trained by the owner. The personnel must be trained by the owner accordingly.

2.5 Personal protective equipment

Personal protective equipment serves to protect people against hazards to their safety and health while working.

The personnel must wear the personal protective equipment while working on and with the machine which is referred specially to in the individual sections of these instructions.

Description of the personal protective equipment

The personal protective equipment is explained below:

Protective clothing
Protective clothing are tight fitting working clothes with low tear resistance, with tight sleeves and without any parts sticking out. These clothes primarily protect against getting caught by moving machine parts. Do not wear rings, chains, necklaces, and other jewellery.

Protective helmet
The protective helmet provides protection against falling and flying parts and materials.

Safety boots
Safety boots are intended to protect against slipping hazards or foot hazards like heavy gear.

Safety harness
The safety harness is used as a protection against falling where there is an increased risk of falling. Such a risk exists if certain height differentials are exceeded and the work location is not safeguarded by a railing.

Put on the safety harness so that the lifeline is connected to the safety harness, as well as to a fixed attachment point, if necessary provide shock absorbers.

Only persons who have been specially trained in the use of safety harnesses may use the safety harness.

2.6 Safety equipment

WARNING!

Danger to life from nonfunctional safety devices!

If safety devices are not functioning or are disabled, there is a danger of grave injury or death.

- Check that all safety devices are fully functional and correctly installed before starting work.
- Never disable or bypass safety devices.
- Ensure that all safety devices are always accessible.

2.6.1 Position of the safety equipment

The following illustrations shows the position of the safety equipment.

View from the left side

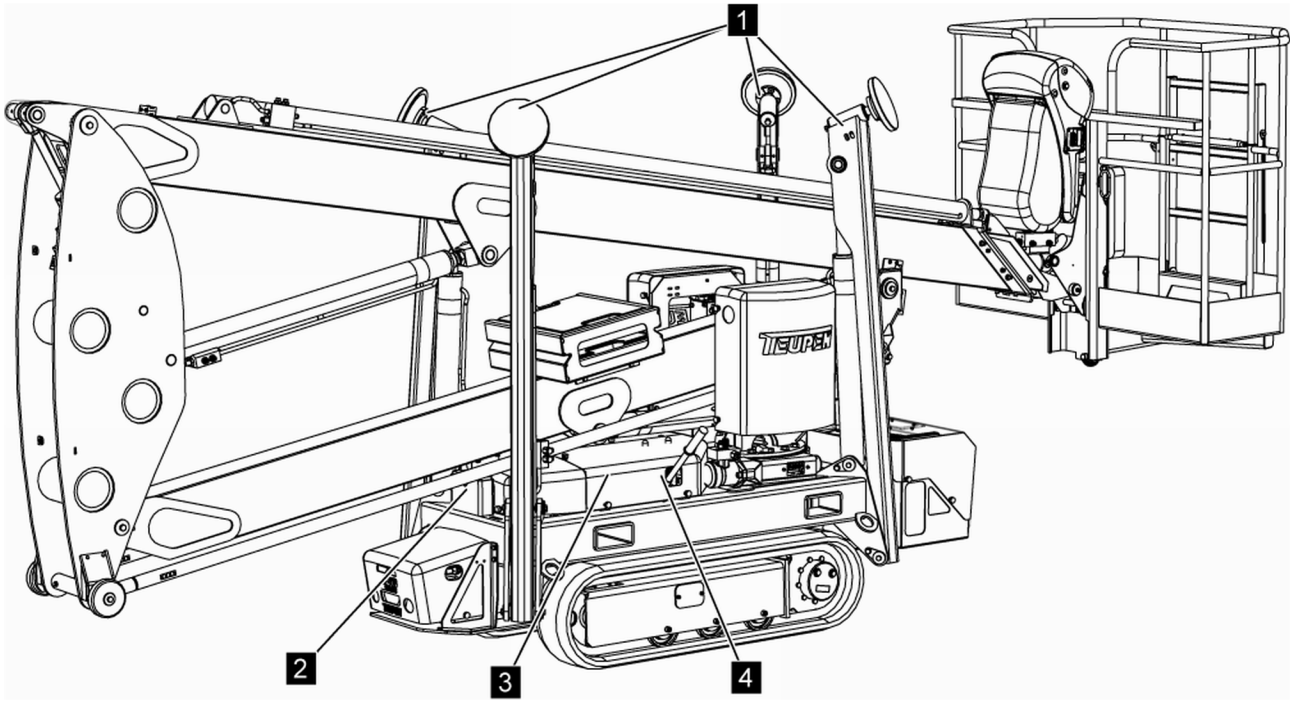

Fig. 2: Position of the safety equipment

1 Limit switch outriggers
2 Limit switch, transport lock lower boom
3 Valves for emergency/service operation chains/bracing function
4 Limit switch, locking bolts

View from the right side

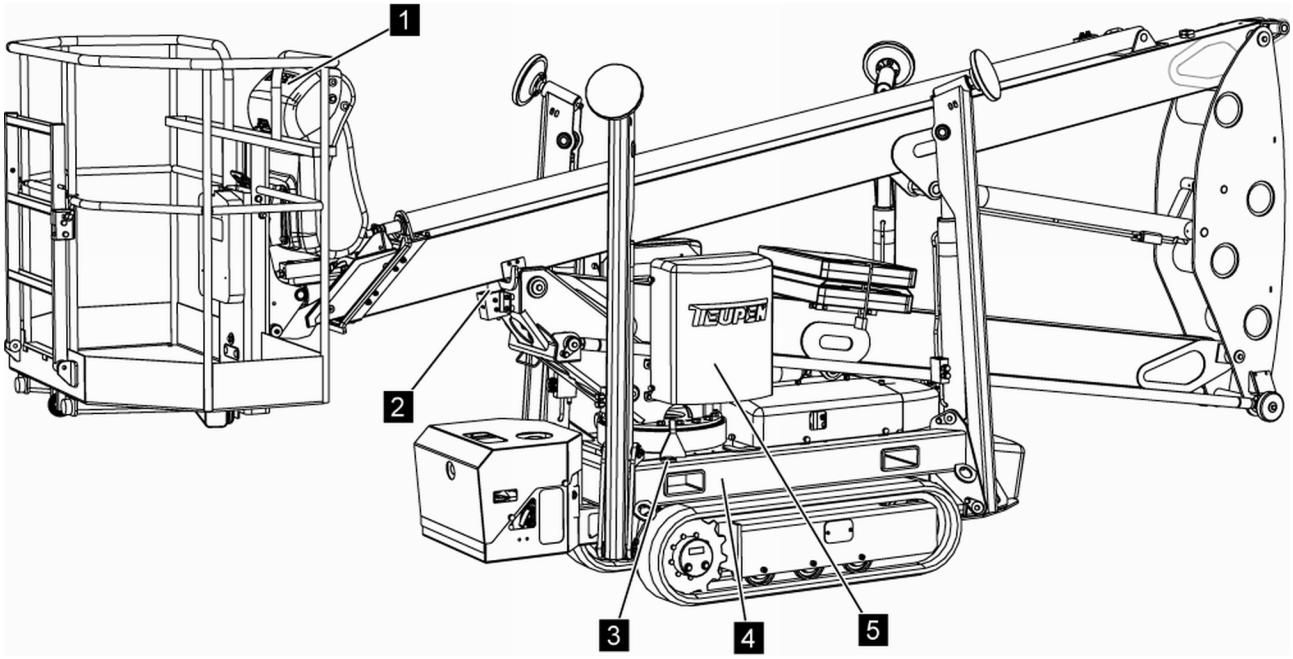

Fig. 3: Position of the safety equipment

1 Emergency Stop button on the control panel/cable remote control
2 Limit switch, transport lock upper boom
3 Circular level
4 Tilt sensor (covered)
5 Valves for emergency/service operation platform function

2.6.2 Description of the installed safety equipment

Emergency Stop button

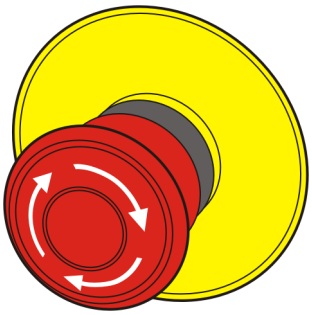

Fig. 4: Emergency Stop button

By pressing the Emergency Stop button, the machine is stopped due to immediate switching off of the power supply. After the Emergency Stop button has been pressed, it must be unlocked by turning it in order to switch the machine on again.

WARNING!

Danger to life due to uncontrolled switching on again!

Uncontrolled switching on again of the machine can cause severe injuries or even death.

- Ensure before switching on again that the cause of the emergency stop has been eliminated and all safety equipment is mounted and functioning properly.
- Only unlock the Emergency Stop button if there is no more danger.

Limit switch

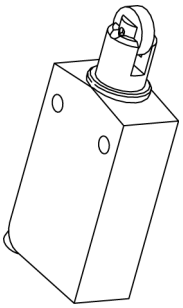

Fig. 5: Limit switch (similar to illustration)

Limit switch retrieve the correct positioning of certain components. For example, the limit switches can prevent the inadvertent movement of the machine.

Tilt sensor and circular level (bubble level)

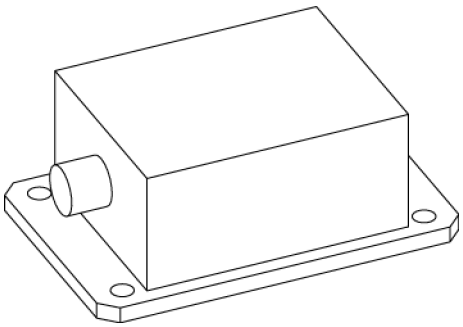

Fig. 6: Tilt sensor

During automatic bracing, the aerial access platform is aligned horizontally automatically with the help of the tilt sensor (Fig. 6). The maximum permissible inclination is 1°; this must be checked visually with the circular level (Fig. 7).

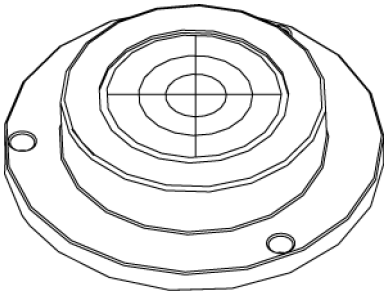

Fig. 7: Circular level

Valves for emergency and service operation

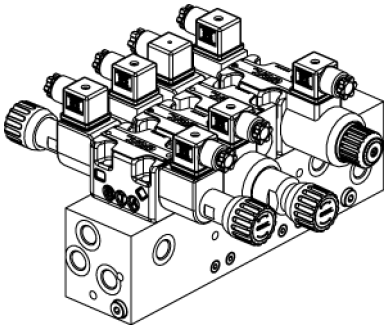

Fig. 8: Example: Valve block

During power failure or for maintenance purposes it is possible to operate the aerial access platform in Emergency or in service operation. Using various valves (Fig. 8), it is possible to address and move the corresponding components without power supply.

2.7 Symbols on the machine

The following symbols and indicator plates are on the machine.

WARNING!

Danger of injury due to illegible symbols!

In the course of time, stickers and signs can get soiled or become illegible in other ways, so that hazards are not recognised and necessary operating instructions cannot be followed. This creates a danger of injury.

- Always keep all safety, warning and operating instructions in easily-legible condition.
- Replace damaged signs or stickers immediately.

With specification of the item number, the stickers can be ordered from the manufacturer. Please see page 2 for the contact data.

Sample item number

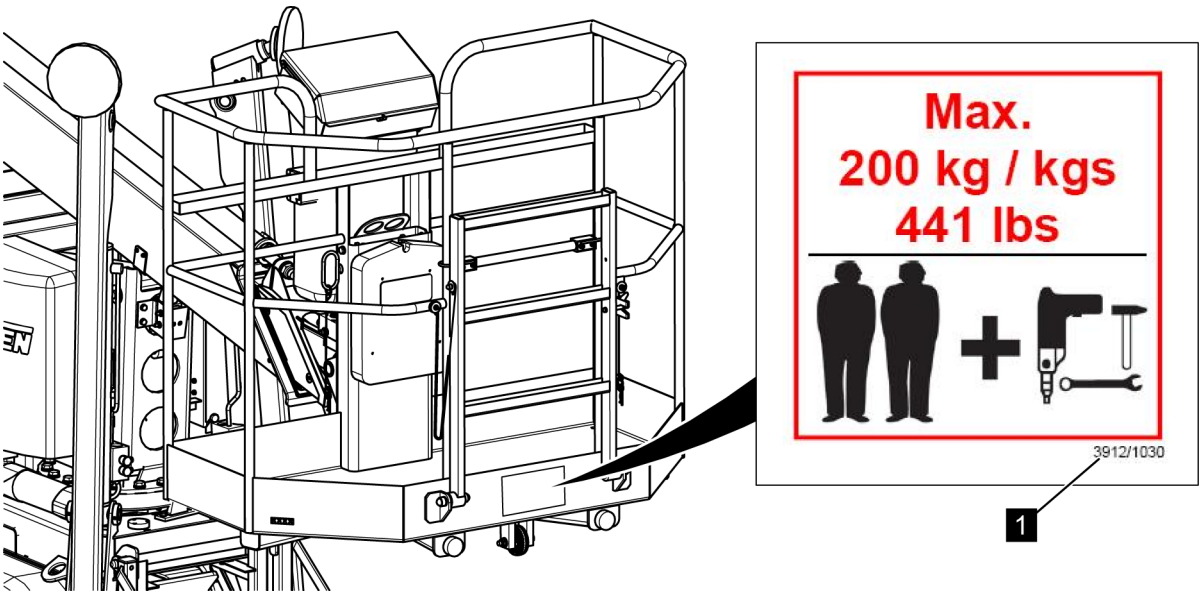

Fig. 9: Sample item number

Each sticker has an item number (example: Fig. 9/1). This item number can be attached to various location on the sticker. The item numbers always consist of the numeric sequence 3912 followed by a 4-digit number. In the example Fig. 9: 3912/1030.

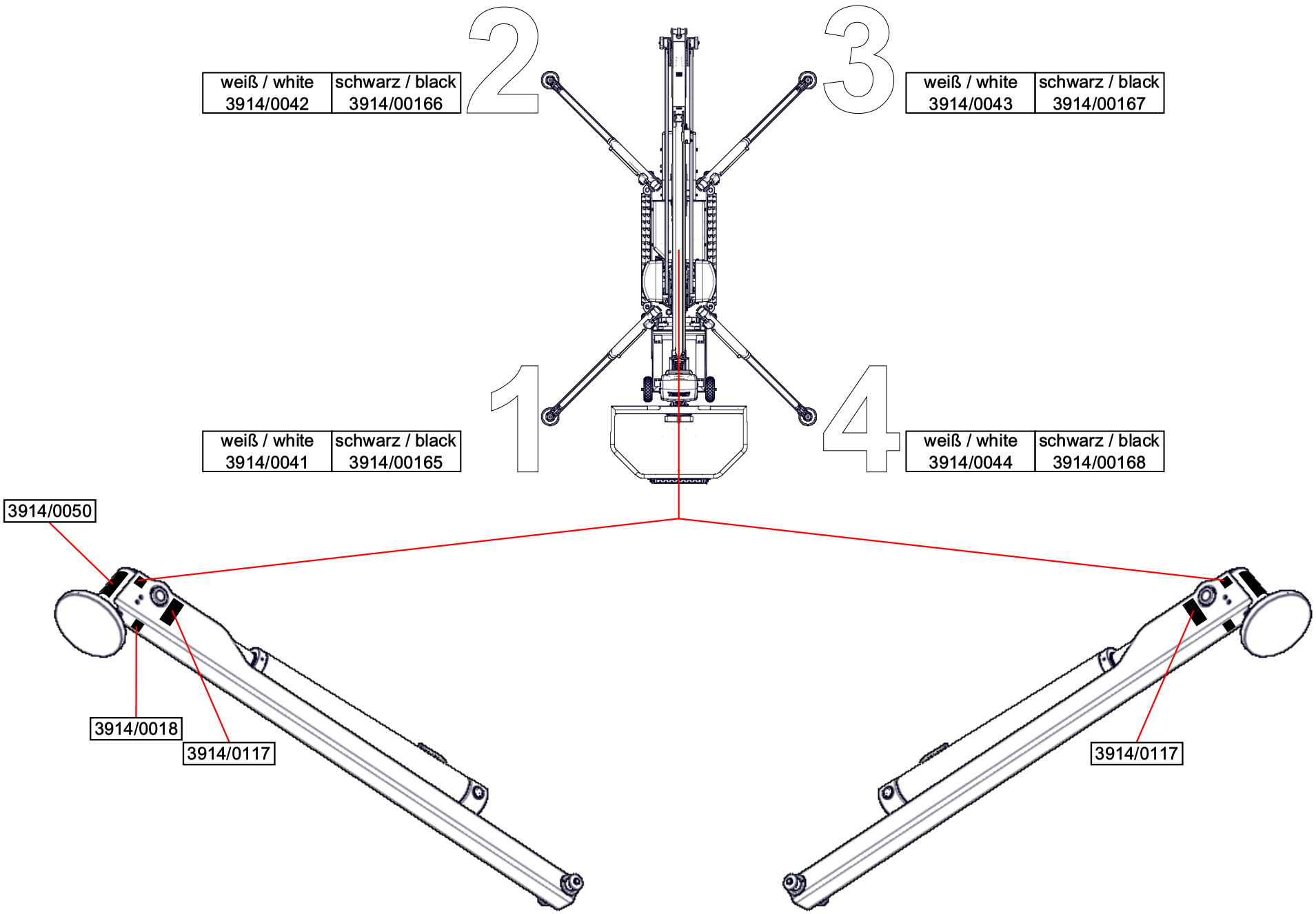
2
weiß / white
3914/0042
schwarz / black
3914/00166
3
weiß / white
3914/0043
schwarz / black
3914/00167
1
weiß / white
3914/0041
schwarz / black
3914/00165
4
weiß / white
3914/0044
schwarz / black
3914/00168
3914/0050
3914/0018
3914/0117
3914/0117

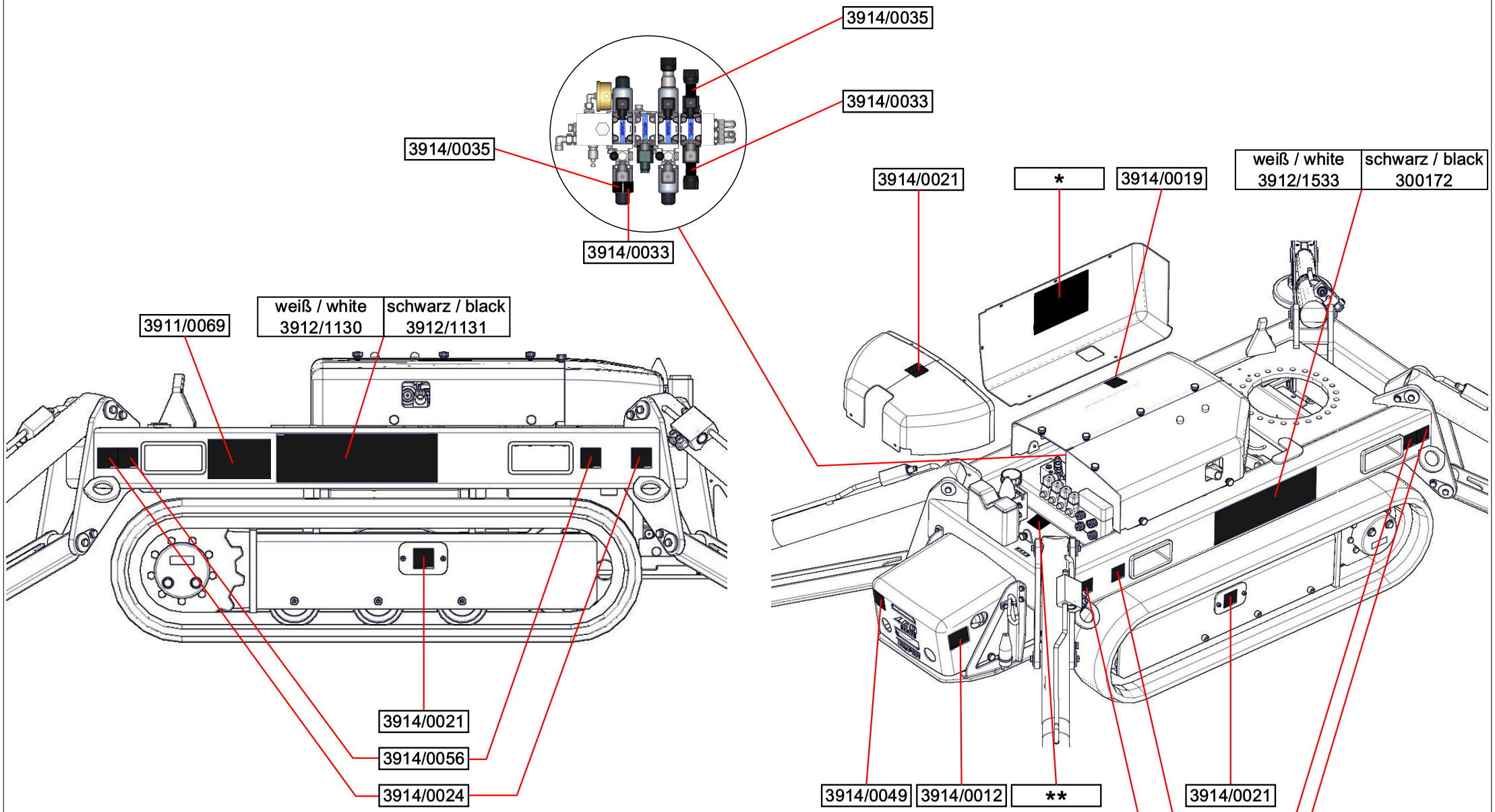

Pos.	DE-EN	NL-FR	PT_EN
*	3914/0113	3914/0173	300587

Pos.	Plantohyd 32-S	Panolin HLP S 46
**	3914/0020	3914/0263

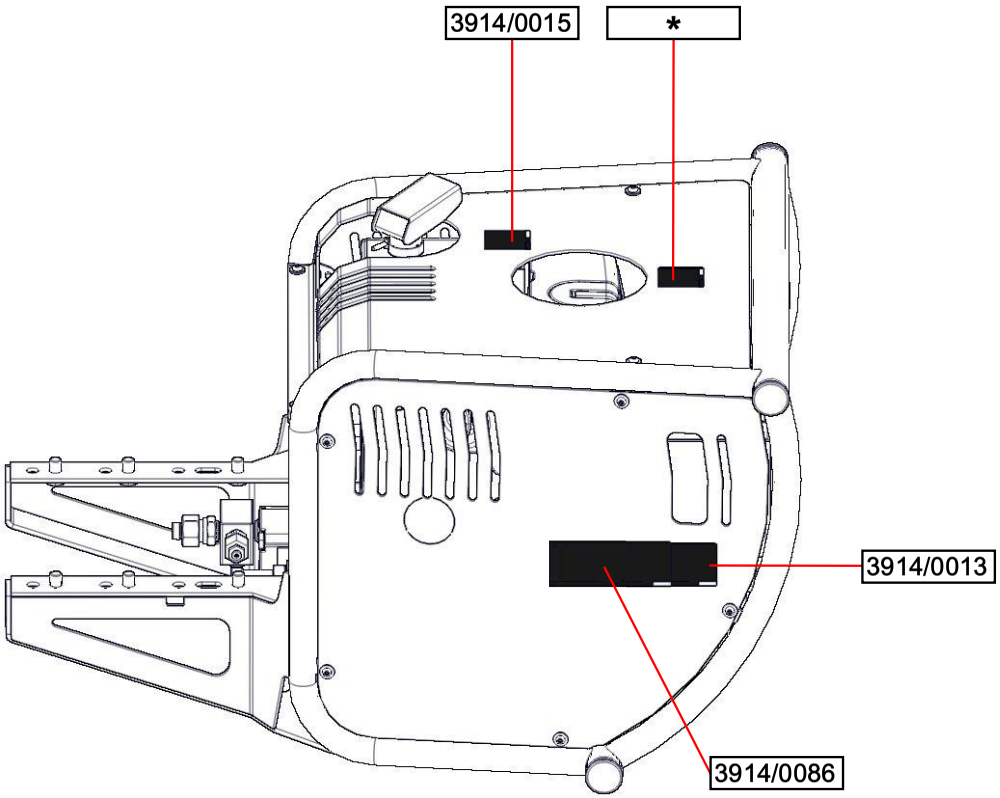

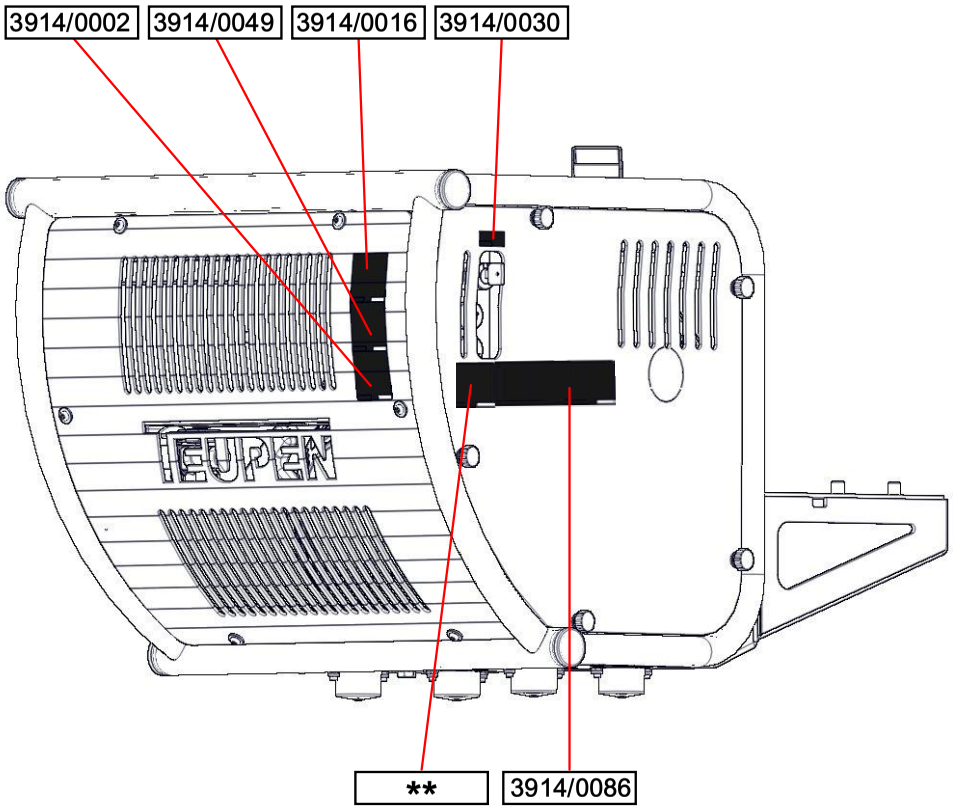

Pos.	Diesel, gazole	Benzin, petrol, essence
*	3914/0005	3914/0085

Pos.	DE-EN	NL-FR	PT_EN
**	3914/0017	3914/0091	300592

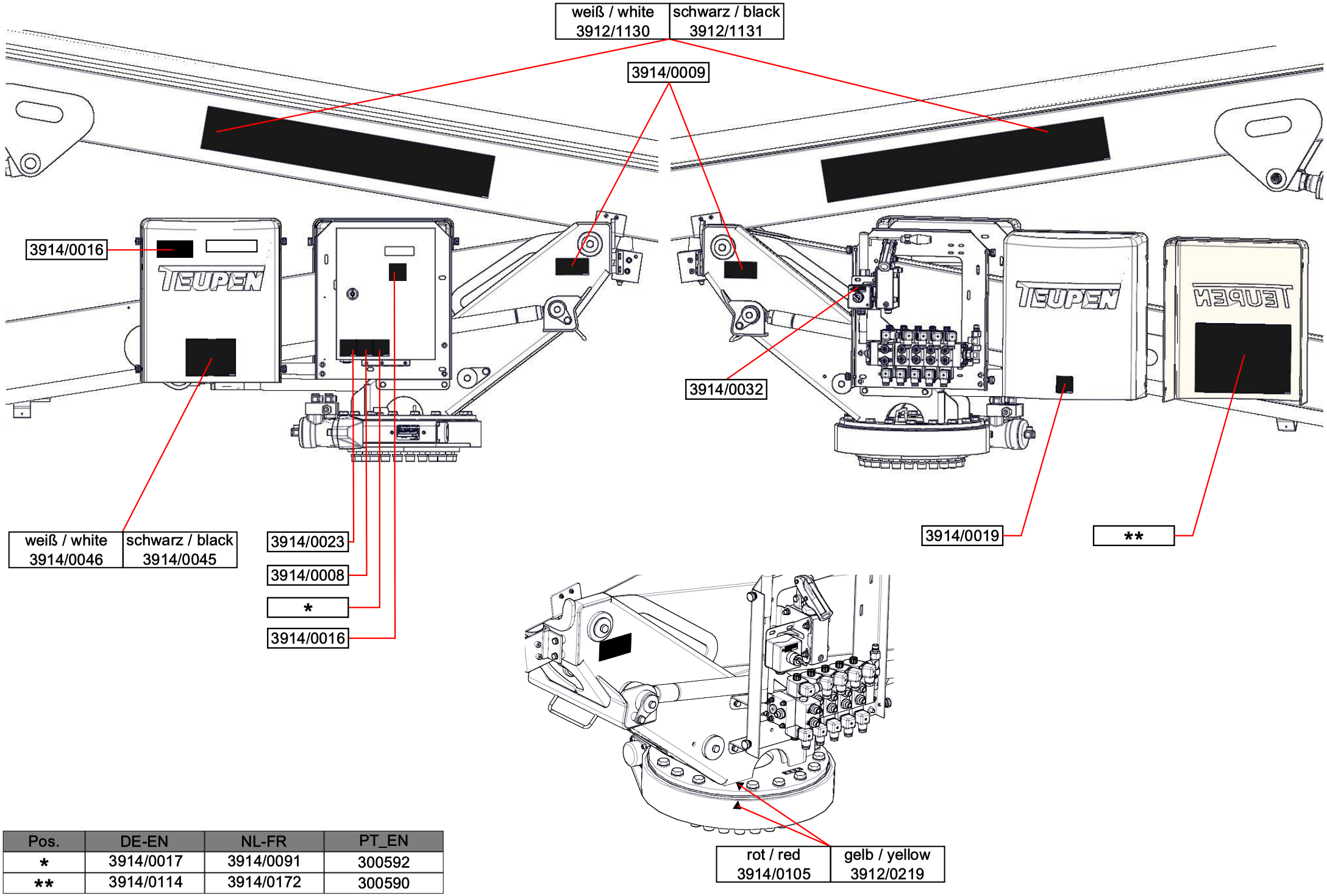

Pos.	DE-EN	NL-FR	PT_EN
*	3914/0017	3914/0091	300592
**	3914/0114	3914/0172	300590

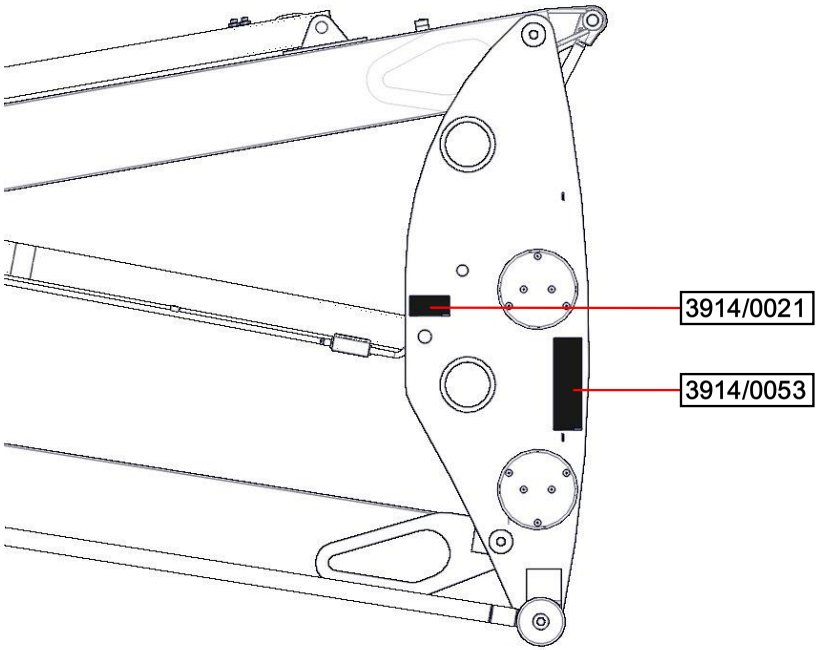
3914/0021
3914/0053

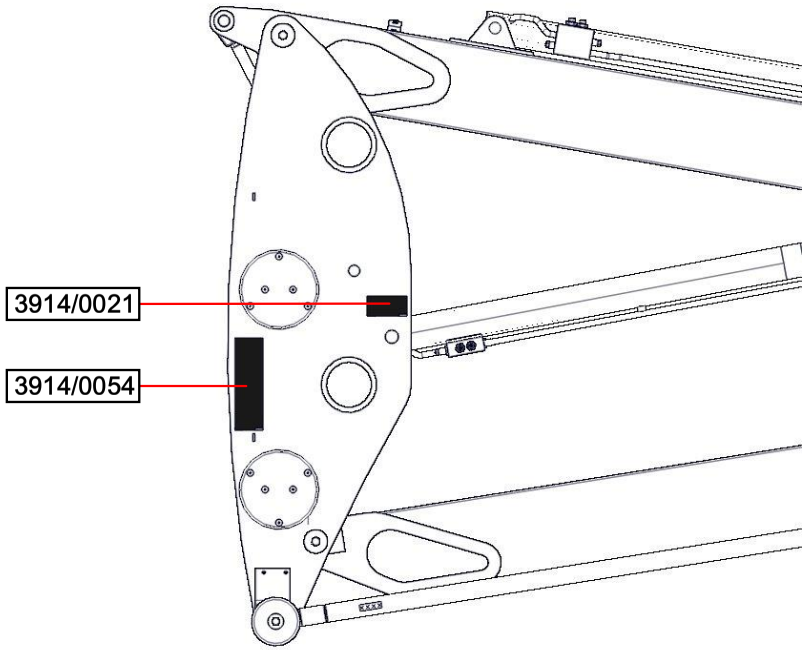
3914/0021
3914/0054

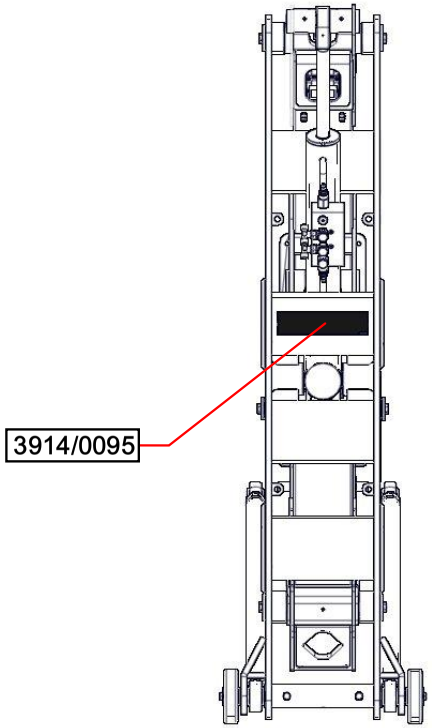
3914/0095

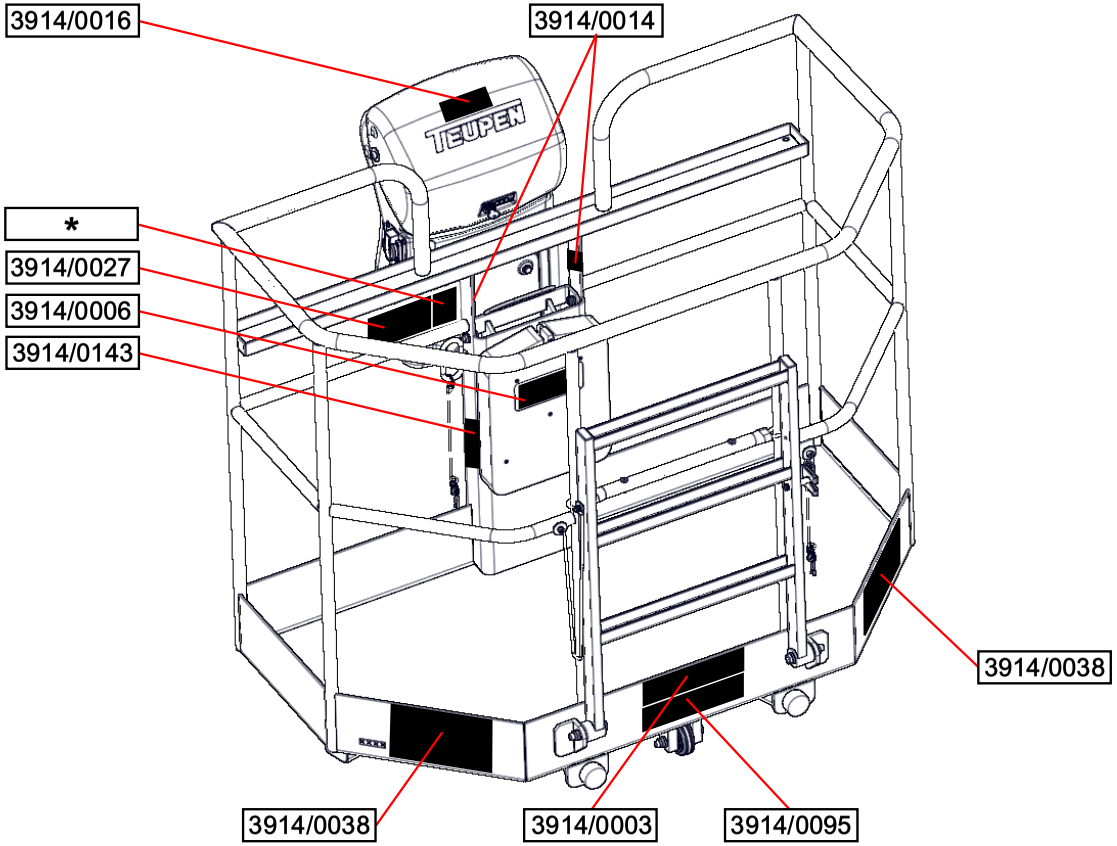

Pos.	Sprache / Language	Leo 15 GT
*	NL_FR	3914/0061
	DE_EN	-

2.8 Behaviour in case of fire or accidents

Preventive measures

- Be prepared for fire and accidents at all times!
- Keep first-aid equipment (first-aid kit, blankets, etc.) and fire extinguishing devices operational and readily available.
- Make your personnel familiar with accident reporting equipment as well as first-aid and rescue equipment.
- Keep access paths clear for rescue vehicles.

Steps in case of fire and accidents

- Immediately trigger an Emergency Stop using EMERGENCY-STOP devices.
- Provided your own health is not in danger, rescue all personnel from the danger area.
- If necessary, initiate first aid measures.
- Alert the fire department and/or emergency medical services.
- In case of fire: provided your own health is not in danger, extinguish the fire using fire extinguishing equipment and continue to do so until the fire department arrives.
- Notify the person in charge at the machine's place of installation.
- Clear access paths for rescue vehicles.
- Wave rescue vehicles into position.

2.9 Environmental protection

NOTICE!

Danger to the environment due to incorrect handling of materials which can harm the environment!

In case of incorrect handling of materials which can harm the environment, especially improper disposal, there can be significant damage to the environment.

- Always heed the notes below about the handling of materials which can harm the environment and their disposal.
- If materials which can harm the environment accidentally escape into the environment, take suitable measures immediately. In case of doubt, inform the responsible local authority about the damage and ask what suitable measures to take might be.

The following materials which might harm the environment are used:

Cleaning liquids

Cleaning liquids incorporating solvents contain toxic substances. They must not be allowed to escape into the environment. Disposal must be carried out by a specialist disposal company.

Lubricants

Lubricants such as greases and oils contain toxic substances. They must not be allowed to escape into the environment. Disposal must be carried out by a specialised disposal company

Hydraulic oil

Hydraulic oil may not be allowed to escape into the environment. Hydraulic oil can cause long-term damage to bodies of water. Disposal must be handled by a professional disposal company.

Fuels

Fuels contain poisonous substances. They may not be allowed to escape into the environment. Disposal must be handled by a professional disposal company.

Cooling water - frost protection	Cooling water and frost guards contain toxic substances. They must not be allowed to escape into the environment. Disposal must be carried out by a specialist disposal company.
Rechargeable batteries or batteries	Rechargeable batteries and batteries contain toxic heavy metals. They are subject to special waste treatment and must be handed in to municipal collection points or disposed of by a specialist company.

3 Technical data

3.1 Dimension sheet

3.1.1 Main dimensions

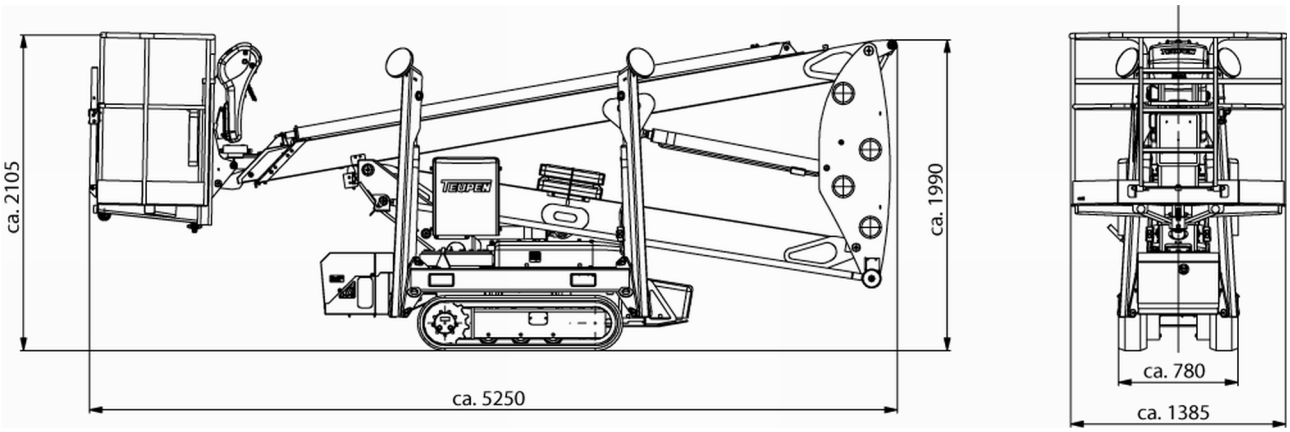

Fig. 12: Main dimensions

3.1.2 Work diagram

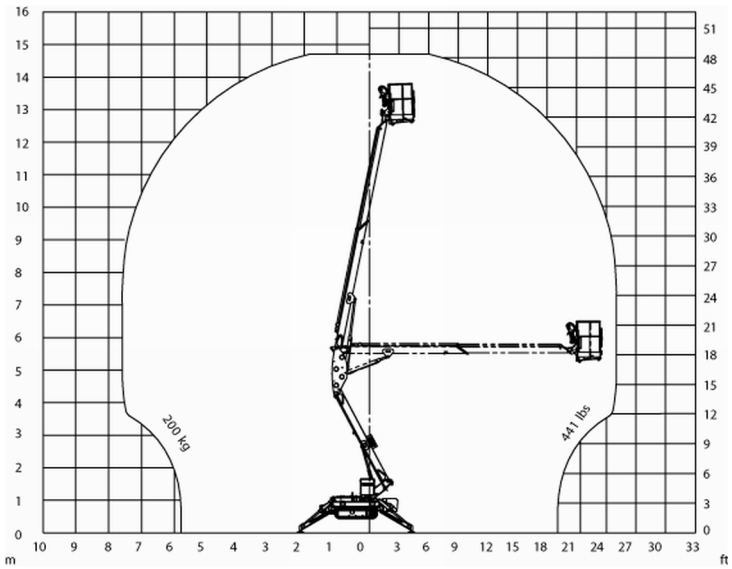

Fig. 13: Work diagram

3.2 Machine

Data	Value	Unit
Overall length	5.25	m
Overall length without working basket	4.52	m
Overall width	0.78	m
Overall height	1.99	m
Gross weight*	1750	kg
Carrying capacity while driving	4.65	kN/m^2
Carrying capacity in working position	1.98	kN/m^2

* Possible weight deviation due to:

- - 1 % production tolerance
- ± 2.5 % production tolerance and permanently-installed accessories

3.3 Platform system

Data	Value	Unit
Max. working height at 200 kg	14.70	m
Lateral outreach at 80 kg	7.60	m
Lateral outreach at 200 kg	7.60	m
Max. basket load	200	kg
Working basket	0.7x1.4 x1.1	m
Max. working range	355	°

3.4 Chassis

Data	Value	Unit
Height adjustable*	12	cm
Width adjustable*	18	cm

Data	Value	Unit
Climbing ability	17 (30)	° (%)
Slope angle	17 (30)	° (%)
Travel speed	1.0	km/h
Max. chassis clearance	15	cm

*Option

3.5 Bracing

Data	Value	Unit
Max. bracing width	3.13	m
Min. bracing width	2.95	m
Bracing pad Ø	0.2	m
Bracing possible up to slope of	13 (23)	° (%)
Max. chassis clearance	42	cm

3.6 Drive

3.6.1 Combustion engines

Robin-Subaru EX 21

Data	Value	Unit
Output	5.1 (7.0)	kW (PS)
Tank capacity	3.6	l
Fuel	Petrol	

Hatz-Diesel 1B30 (optional)

Data	Value	Unit
Output	5.4 (7.3)	kW (PS)
Tank capacity	5.0	l
Fuel	Diesel	

3.6.2 Electric motor

EMG-EBS 90 LX4

Data	Value	Unit
Voltage	230	V
Frequency	50	Hz
Current consumption	12.9	A
Output	2.2	kW

Cable lengths

Data	Value	Unit
Maximum cable length with cable diameter 3 x 2.5 mm^2	40	m
Maximum cable length with cable diameter 3 x 4.0 mm^2	80	m

3.7 Emissions

Data	Value	Unit
Noise during e-motor propulsion	< 70	dB(A)
Noise during combustion engine propulsion	< 89	dB(A)

3.8 Operating conditions

Data	Value	Unit
Maximum permissible wind speed in operation	12.5 (6)	m/s (Bft)
Temperature range	-15 to +40	°C

3.9 Hydraulic system

Response pressure of the pressure limiting valves

Data	Value	Unit
Platform functions	150	bar

Data	Value	Unit
Support functions	150	bar
Crawler chassis	150	bar

Fill quantities

Data	Value	Unit
Fill quantity of the hydraulic system	approx. 50	l
Fill quantity of the hydraulic tank	approx. 25	l

3.10 Lubricants

Lubricant	Type	TEUPEN item number	Fill level	Unit
Gearbox oil	Gearbox oil	3917/0122 *	max. 1	l
Hydraulic oil	Plantohyd 32-S	3917/0066 *	50	l
Multi-purpose lubricant	-	3917/0095 (cartridge)	0.5	kg
High-performance lubricant	-	3917/0130 (bucket)	1	kg

* upon order, please specify order quantity in litres

Oil recommendations

The hydraulic system of the aerial access platform is filled with the above mentioned hydraulic oil at the factory. It is recommended that you continue to use this hydraulic oil or that you replace it with one of the following hydraulic oils:

Operation temperature	BP	Esso	Fuchs	Shell
-15 to +40 ℃	BP Energol HLP-D 22	HLPD-OEL 22	Renolin MR 5	Shell Hydrol DO 22

3.11 Type plate

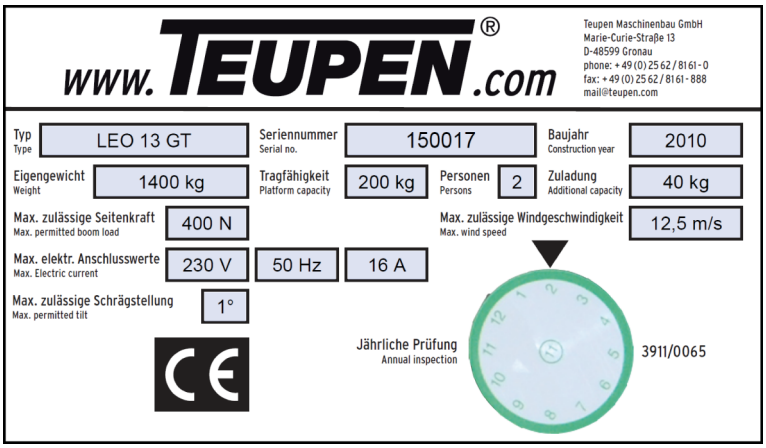

Fig. 14: Sample type plate

The type plate is located on the lift arm holder below the valves for emergency operation. It includes the following data:

- Manufacturer
- Type
- Serial number
- Year of manufacture
- Net weight
- Load capacity
- Permitted number of people
- Payload
- Maximum permissible lateral force
- Maximum permissible wind speed
- Maximum electrical connection values
- Maximum permissible slope
- Time of the annual check
- CE mark

4 Structure and function

4.1 Overview

Overview from the left side

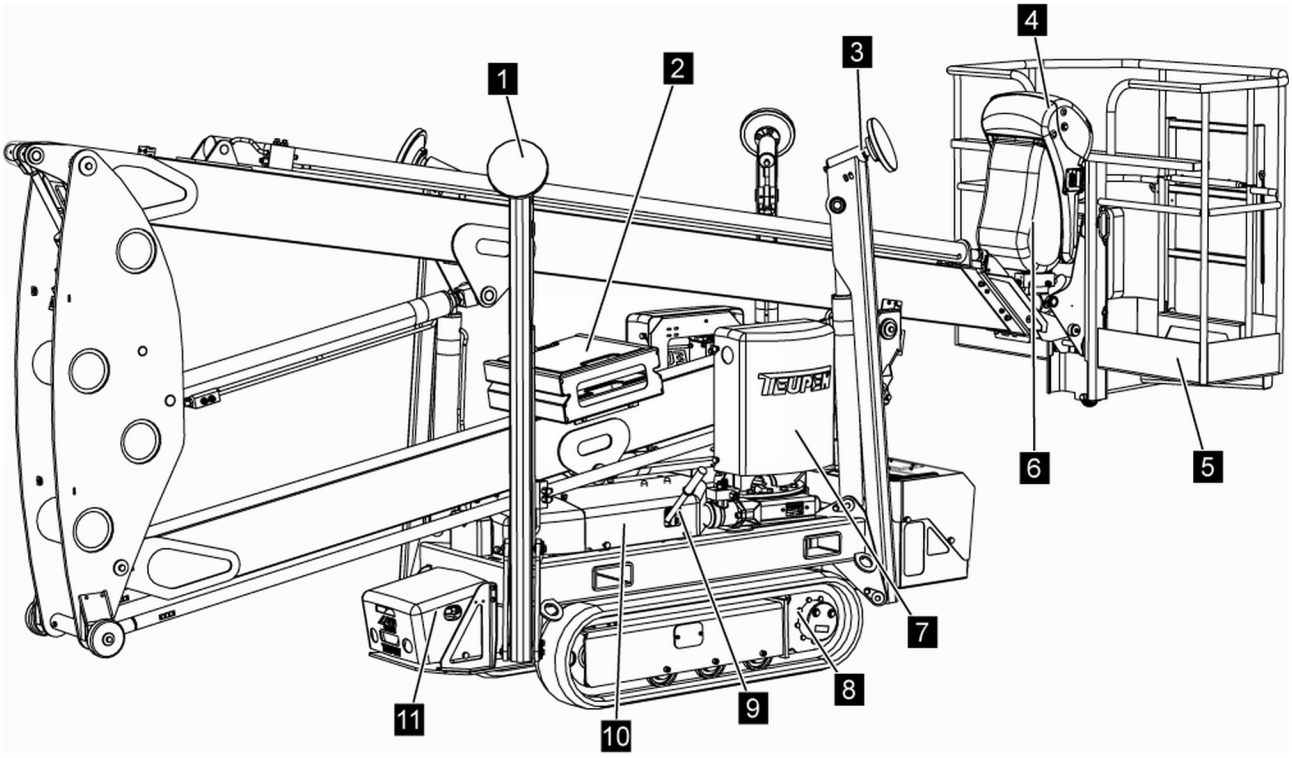

Fig. 15: Overview

1 Outrigger 2
2 Base plates
3 Outrigger 1
4 Control head with control panel/cable remote control and 230 V outlet
5 Working basket
6 Cable bag
7 Control box cover
8 Left crawler chassis
9 Height/width adjustment of the crawler chassis (optional)
10 Valve cover for bracing/chain function
11 Cover for electric motor and hydraulic tank

Overview from the right side

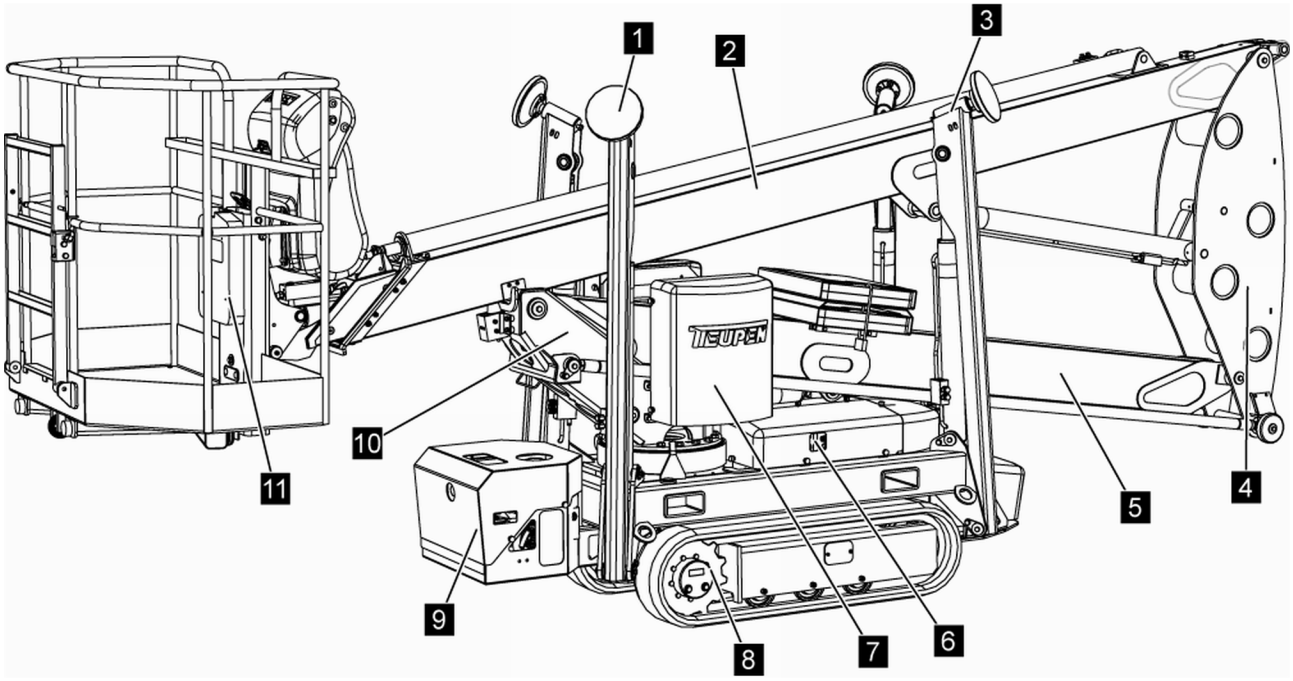

Fig. 16: Overview

1 Outrigger 4
2 Upper boom with telescopic arm
3 Outrigger 3
4 Linkage
5 Lower boom
6 Height/width adjustment of the crawler chassis (optional)
7 Valve cover for bracing/chain function
8 Right crawler chassis
9 Control box cover
10 Lift arm holder
11 Document box (operating instructions, circuit diagram, hydraulic plan)

4.2 Brief description

The aerial access platform helps to perform work in high places. The control takes place via a control panel (Fig. 15/4), which can also be used as a cable remote control. In order to put the aerial access platform in work position, the chassis is lifted using the outriggers 1 to 4 (Fig. 15/1 and 3, as well as Fig. 16/1 and 3) using the automatic bracing or manually. Only when the chassis is levelled correctly (visual check using the circular level) can platform operation be started.

The working basket (Fig. 15/5) is always kept horizontal by a hydrostatic balancing system. In order to reduce the clearance, the working basket (Fig. 15/5) can be removed.

The operation is done either via the power network (construction side feed) using an extension cable (*‘Cable lengths’ on page 42*) or by the combustion engine (Fig. 16/9).

4.3 Assembly description

4.3.1 Platform

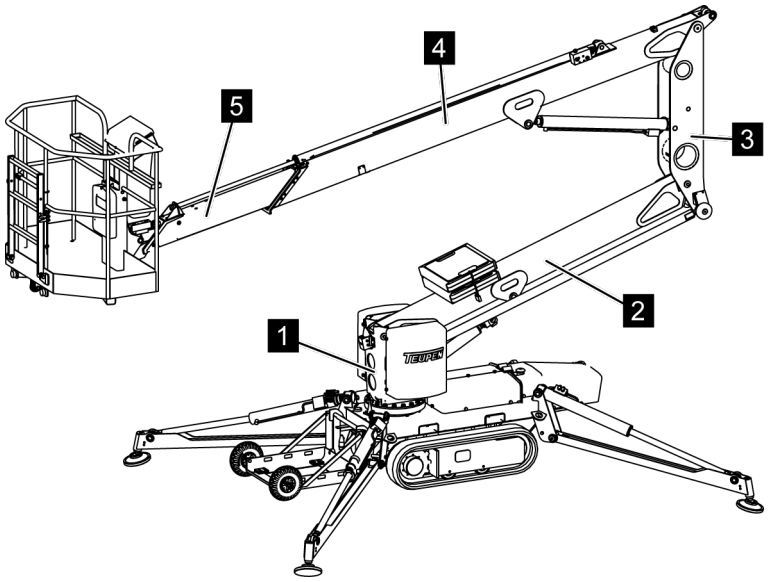

Fig. 17: Platform (similar to illustration)

The work platform consists essentially of the lift arm holder (Fig. 17/1), the lower boom (Fig. 17/2), the linkage (Fig. 17/3) and the upper boom (Fig. 17/4) with telescopic arm (Fig. 17/5).

4.3.2 Outriggers

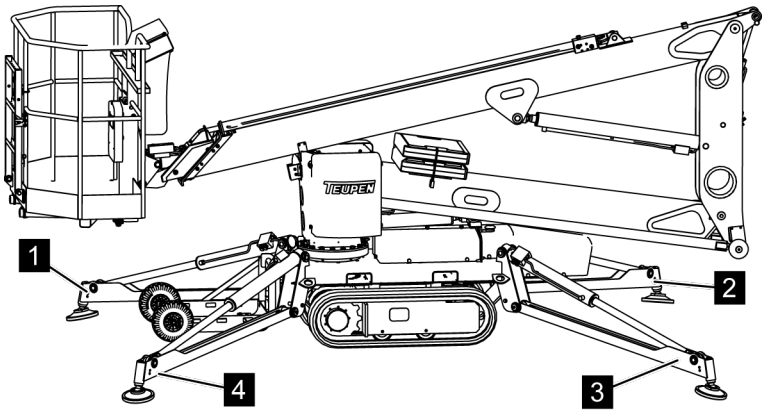

Fig. 18: Machine in work position

With the help of the outriggers (Fig. 18/1 to 4), the chassis is lifted and the aerial access platform is thus put into the working position. The outriggers are numbered consecutively according to the position numbers.

4.3.3 Working basket

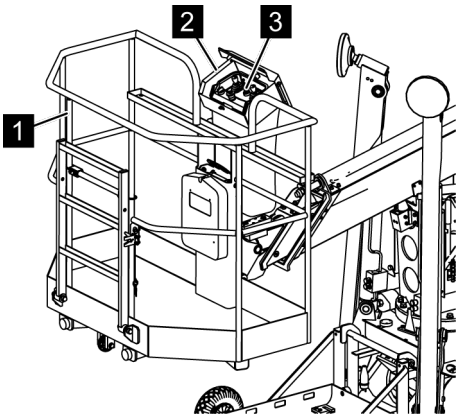

Fig. 19: Working basket

In the working basket (Fig. 19/1) there is space for a maximum of two people. The control panel (Fig. 19/3) is located in the control head (Fig. 19/2); it can be taken out and used as a remote control.

4.3.4 Crawler chassis

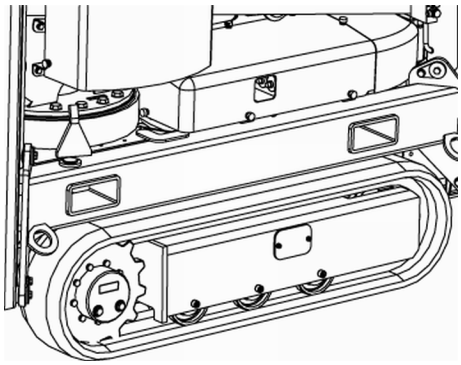

Fig. 20: Crawler chassis

In the transport position (*Chapter 6.7 'Putting the machine in transport position' on page 79*), the aerial access platform can be moved with the help of the chain drive. Only a grease gun is required for the chain tensioning. See also *Chapter 8.4 'Notes about the rubber track' on page 132*.

The chassis can be adjusted in height and width using the "Height/width adjustment" option. The adjustment is done mechanically (*Chapter 6.8 'Height and width adjustment crawler chassis (optional)' on page 84*).

4.3.5 Combustion engine

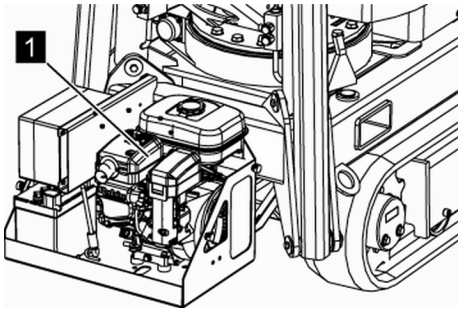

Fig. 21: Combustion engine

The combustion engine (*Chapter 4.3.5 'Combustion engine' on page 49*/1), together with the hydraulic aggregate supplies the necessary hydraulic pressure.

4.3.6 Electric motor

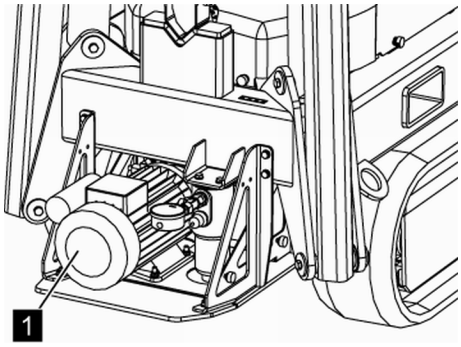

Fig. 22: Electric motor

As an alternative to the combustion engine, the necessary hydraulic pressure can be generated by the electric motor (Fig. 22/1).

The connection is provided by the customer through a 230 V connection.

4.4 Operating and display elements

4.4.1 Control panel/Cable remote control

The control takes place via a control panel, which can also be used as a cable remote control.

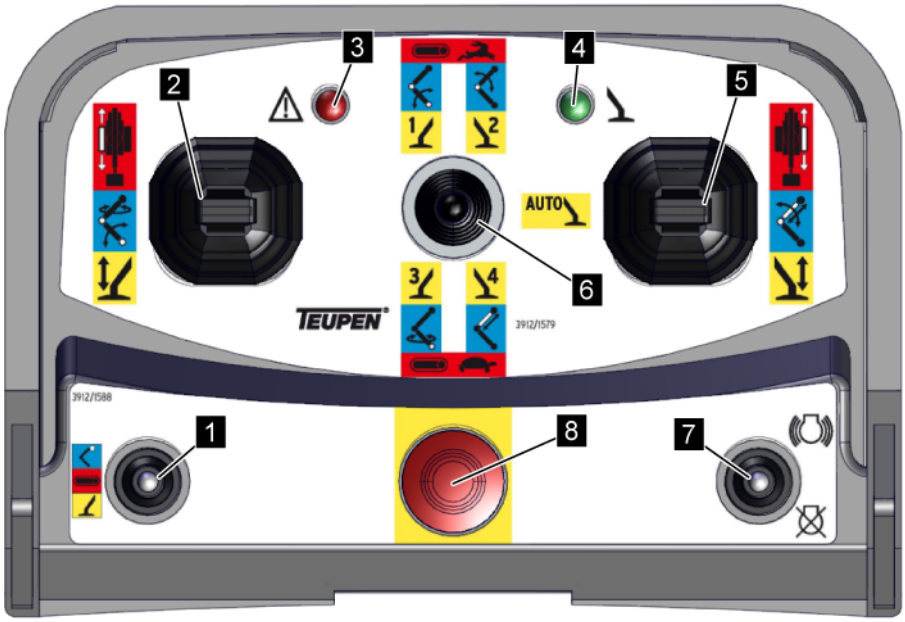

Fig. 23: Control panel/cable remote control (similar to illustration)

1 Rocker switch function selection
2 Left control lever
3 Red light
4 Green light
5 Right control lever
6 Pre-selection lever
7 Engine switch
8 Emergency Stop button

The operating elements of the control panel are explained in detail below.

1 - Rocker switch function selection

Using the rocker switch function selection the platform, bracing and chain function are selected.

2 - Left control lever

Depending on the operating function selected and the position of the pre-selection lever, the functions marked in colour can be executed with the left control lever.

3 - Red light

After switching on the voltage supply, the red light blinks until the machine is ready for operation.

4 - Green light

The green light blinks in the transport position and stays lit when the machine is braced correctly.

5 - Right control lever	Depending on the operating function selected and the position of the pre-selection lever, the functions marked in colour can be executed with the right control lever.
6 - Pre-selection lever	Various function groups are selected with the pre-selection lever. There are three function groups from which to select; these are active depending on the position of the rocker switch.
7 - Engine switch	The rocker switch starts and stops the combustion engine.
8 - Emergency Stop button	The Emergency Stop button is on the control panel (↳ *'Emergency Stop button' on page 29*). After activation, it must be unlocked by turning it so that the machine is ready for operation again.

4.4.2 Controller for emergency and service operation

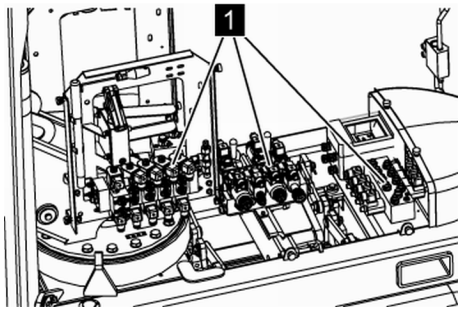

Fig. 24: Valve component group

The aerial access platform can be operated manually during power failure or during service operation, using the valve component group (Fig. 24/1).

4.4.3 Display at the control box

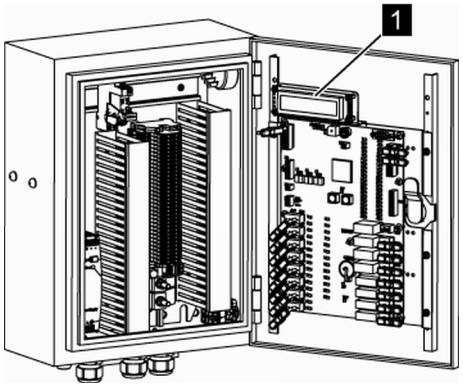

A display (Fig. 25/1) that shows the error codes and error names is located in the control box (*Chapter 8.3 'Error code list' on page 127*).

Fig. 25: Display

4.5 Power connection

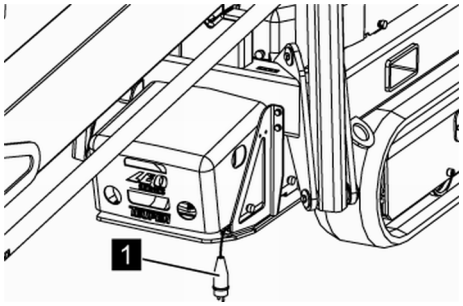

The connection for the electric motor is provided via a 230 V cable (Fig. 26/1). It is connected to the power supply (construction site power supply) by using an extension cord (*'Cable lengths' on page 42*).

Fig. 26: 230V connection

4.6 Work areas and danger zones

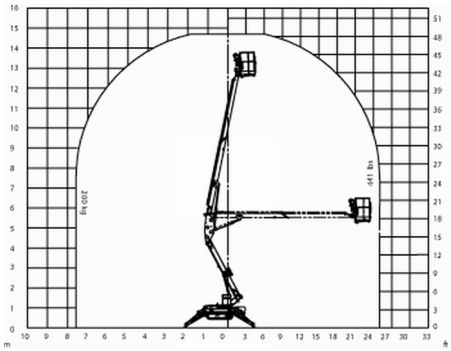

The work area and danger zones are within and vertically below the swivel range of the machine.

Fig. 27: Work area and danger zone

4.7 Accessories

4.7.1 Keys

Fig. 28: Keys

The scope of supply includes various keys. They are used, among other things, for opening the control desk, control box, etc.

4.7.2 Safety harness (optional)

A safety harness must be worn for all work in the working basket. This can be ordered from the manufacturer. Please see page 2 for the contact data.

Item no. 8300/0174

4.7.3 Lifting device (optional)

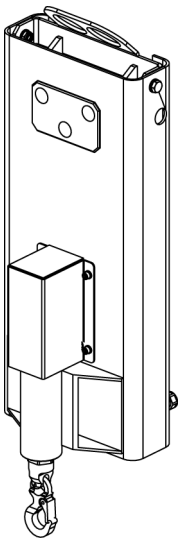

Fig. 29: Lifting device

No aerial access platform must be installed on the Leo13GT and Leo15GT, with control connection at the chassis.

Optionally, a lifting device (Fig. 29) can be mounted instead of the working basket. Operation takes place via the cable remote control. See also the separate operating instructions for the lifting device.

Item no. 0900-0446

5 Transport and storage

5.1 Safety instructions for transport

Improper transport

WARNING!

Danger to life due to improper transport!

Improper transport can cause severe injuries or even death.

- During transport of the aerial access platform, do not stay in the working basket.
- Heed dimensions of the aerial access platform.
- Never step under or into the swivel range of loads that are up in the air.
- Only move loads under supervision.
- Only use approved lifts and lifting accessories with sufficient carrying capacity.
- Only use the attachment points provided.

5.2 Transport inspection

Check the delivery immediately upon receipt to ensure that it is complete and there is no evidence of transport damage.

In case of transport damage which is visible from the outside, proceed as follows:

- Do not accept the delivery or accept it only with reservations.
- Note scope of the damage on the transport documents or on the transporter's delivery slip.
- Initiate a complaint.

Complain about any defect as soon as it is detected. Damage claims can only be made within 12 months after acquisition of the machine. Special agreements (e.g. maintenance contract) are possible.

5.3 Transport

Attachment points

The following attachment points are provided:

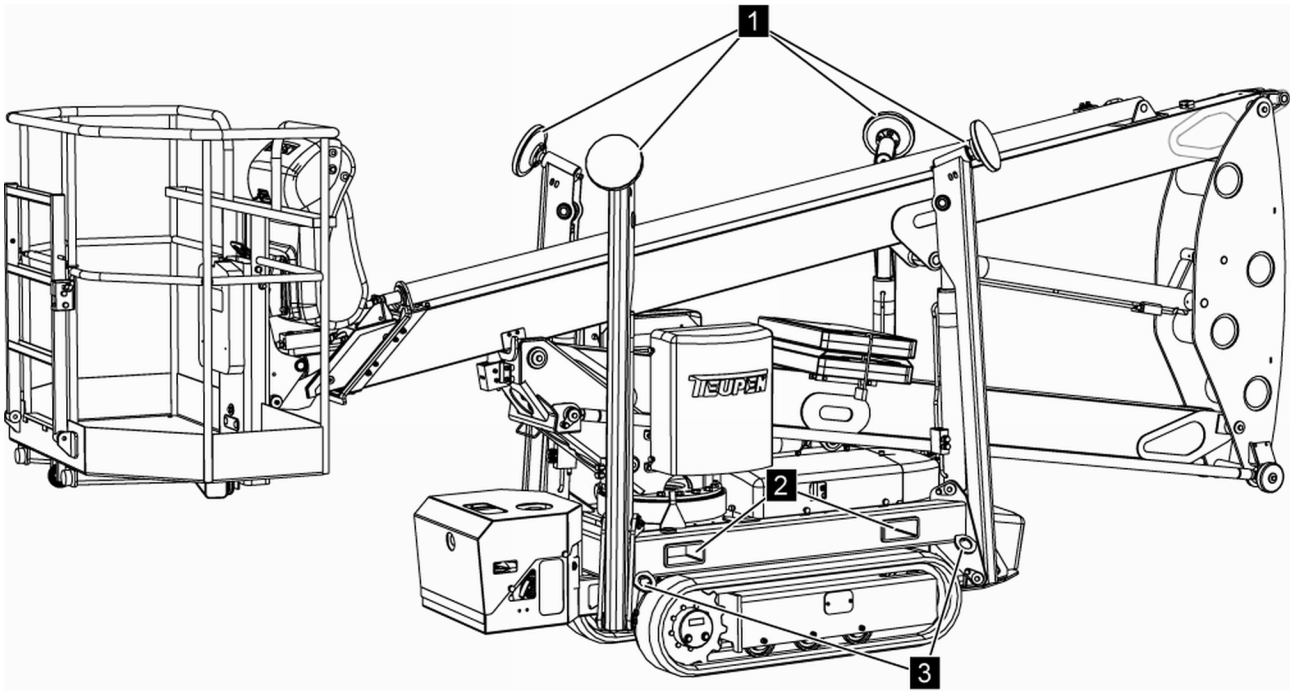

Fig. 30: Attachment points

1 Attachment points for transport with a crane
2 Attachment points for transport with a fork lift (continuous)
3 Lashing eyes for transport on a trailer (on both sides)

Fig. 31: Attachment point

Attachment points for transport with a crane

Fig. 32: Fork eyes

Fork eyes for transport with a fork lift

Transport and storage

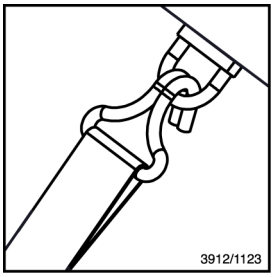

Fig. 33: Lashing eye

Lashing eyes for transport on a trailer

Transport with a crane

Transport pieces can be transported with a crane under the following conditions:

- The crane and lifts must be designed for the weight of the aerial access platform.
- The user must be authorised to operate the crane.
- The machine must be in the transport position (↳ *Chapter 6.7 'Putting the machine in transport position' on page 79*).
- Belts and chains must be the same length and sufficiently long.

Attaching

Protective equipment:
- Protective helmet
- Safety boots

WARNING!

Property damage due to improper attachment!

The use of unsuitable attachment points can cause damage to the machine.

– Only use the attachment points specified here.

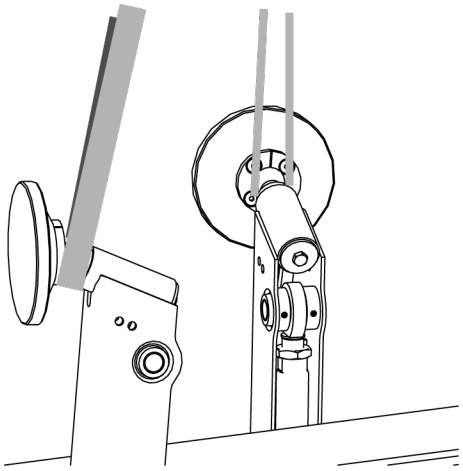

Fig. 34: Attachment point for support pads

1. *Put the machine in transport position (↳ Chapter 6.7 'Putting the machine in transport position' on page 79).*
2. *Switch off the machine (↳ Chapter 6.2 'Switching the machine on/off' on page 63).*
3. *Attach belts or chains to all four support pads with shackles according to* Fig. 34.

Fig. 35: Crane attachment point symbol

4. *The attachment points are marked with the Fig. 35 symbol.*

   Align the boom of the crane so that the lifting accessories are evenly loaded.
5. *If necessary, protect the paint of the aerial access platform with suitable underlay materials.*
6. *Begin transport.*

Transport with a fork lift

The machine can be transported with a fork lift under the following conditions:

- The fork lift must be designed for the weight of the aerial access platform.
- The machine must be in the transport position (↳ *Chapter 6.7 'Putting the machine in transport position' on page 79*).

Transport and storage

Transport

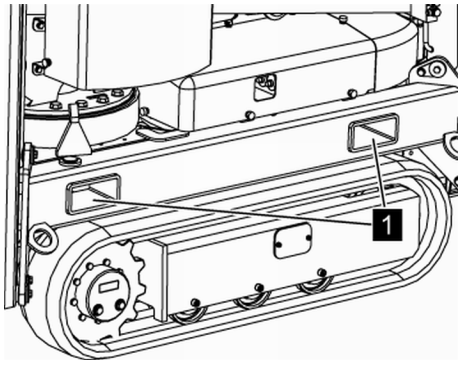

Fig. 36: Transport with a fork lift

Protective equipment:
- Protective helmet
- Safety boots

1. *Put the machine in transport position (↳ Chapter 6.7 'Putting the machine in transport position' on page 79).*
2. *Switch off the machine (↳ Chapter 6.2 'Switching the machine on/off' on page 63).*
3. *Insert the forks of the fork lift into the adapters provided (*Fig. 36/*1).*

Fig. 37: Fork eyes symbol

4. *The fork eyes are marked with the Fig. 37 symbol.*

   Insert the forks until they protrude on the other side.
5. *Lift the machine and begin transport.*

Transport on a trailer

The machine can be transported on a trailer or transporter under the following conditions:

- The trailer or transporter must be designed for the weight and the dimensions of the machine.
- The machine must be in the transport position (↳ *Chapter 6.7 'Putting the machine in transport position' on page 79*).
- The machine must be anchored to the means of transport with safety belts on the lashing eyes (Fig. 39/1) provided.

Loading

Protective equipment:
- Protective helmet
- Safety boots

WARNING!

Danger of injury due to improper moving of the aerial access platform!

With improper moving, the machine can tip or slide. This can cause severe injuries and significant property damage.

– The incline of the ramps may not exceed 30 %.
– During loading, do not stand downhill behind the aerial access platform.
– Go up the ramps forwards.
– Do not turn the aerial access platform on the ramp or loading area.

NOTICE!

Property damage due to improper lashing!

The use of unsuitable attachment points can cause damage to the machine.

– Only use the lashing eyes specified here.

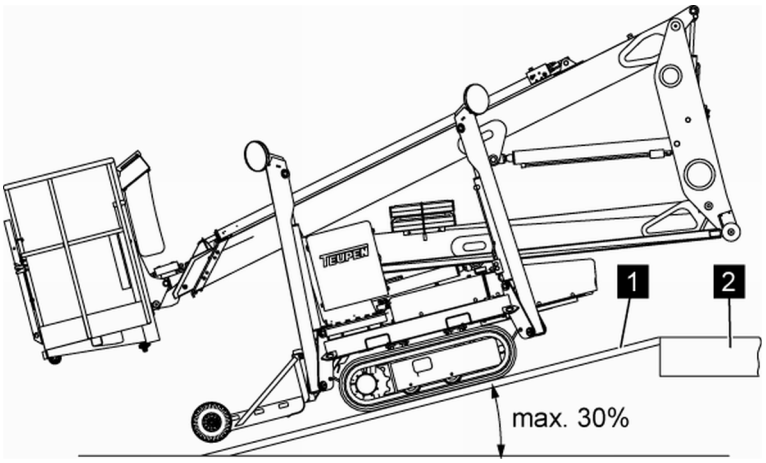

Fig. 38: Transport on a trailer

1. *Move the aerial access platform forwards on the ramps (*Fig. 38/*1).*

2. *When the machine begins to tip on the loading area (*Fig. 38/*2), slow down.*

*When the aerial access platform has been set completely on the loading area (*Fig. 38/*2) with the chains, it is safe to speed up again.*

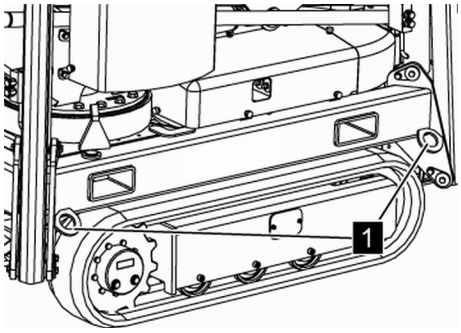

Fig. 39: Lashing eyes

3. *Anchor and secure the aerial access platform to the means of transport, e.g. with safety belts in the lashing eyes (*Fig. 39/*1).*

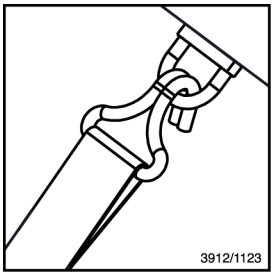

Fig. 40: Lashing eye symbol

4. *The lashing eyes are marked with the Fig. 40 symbol.*

Begin transport.

Unloading

Unloading from a loading area takes place in reverse. To do this, proceed as follows:

1. *Back the aerial access platform up slowly.*

2. *Before tipping, slow down and drive carefully past the tipping point.*

After passing the tipping point, it is safe to speed up again.

5.4 Storage

Storage of the machine

Store the machine under the following conditions:

- Do not store outdoors.
- Store dry and dust-free.
- Do not subject to any aggressive media.
- Protect against solar radiation.
- Avoid mechanical shocks.
- Storage temperature: 15 to 35 °C.
- Relative humidity: max. 60 %.
- In case of storage longer than 3 months, check the condition of all parts regularly. If necessary, freshen or replace the rust-proofing.

6 Operation

6.1 Safety instructions for operation

Improper operation

WARNING!

Danger of injury due to improper operation!

Improper operation can cause severe injuries and significant property damage.

- Execute all operating steps according to the details and instructions in these instructions.
- Always perform all work with at least two people.
- Before beginning work, heed the following:
  - Make sure that all covers and safety equipment are installed and functioning properly.
  - Make sure that there are no people in the danger zone.
- Never take safety equipment out of service or bypass it during operation.

6.2 Switching the machine on/off

Personnel:
- Trained people

Protective equipment:
- Protective clothing
- Safety boots
- Protective helmet

The power is supplied either by the power network (construction side feed) using an extension cable (*'Cable lengths' on page 42*) or by the combustion engine, which is not connected to the power network.

6.2.1 Switching the machine on/off via the mains supply

DANGER!

Danger to life due to electric current!

Upon contact with voltage-conducting parts, there is an immediate danger to life due to electric shock. Damage to the insulation or individual components can present a danger to life.

- In case of damage to the insulation, switch off the voltage supply immediately and have the machine repaired.
- Before performing work on voltage-conducting parts, pull the mains plug.
- Never bypass fuses or take them out of operation. When changing fuses, adhere to the correct amperage.
- Keep humidity away from voltage-conducting parts. This can cause a short-circuit.

Switching on

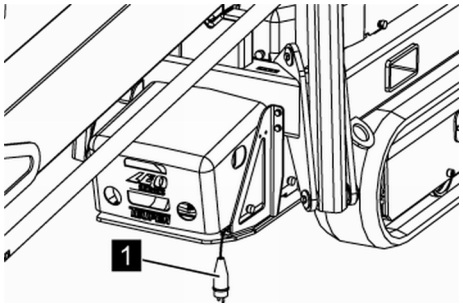

Fig. 41: 230V connection

1. *Connect the plug (*Fig. 41*/1) to the 230 V extension cable. Here, heed the required cable lengths (‘Cable lengths’ on page 42).*

⇨ *The red light on the control panel begins to blink.*

2. *Wait until the red light goes out (approximately 3 to 4 seconds).*

⇨ *The machine is ready for operation.*

The green light blinks if the machine is not braced.

The green light stays on if the machine is braced.

Switching off

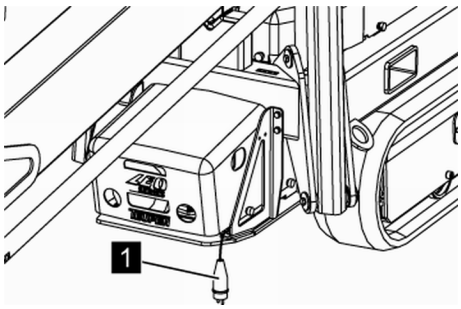

Fig. 42: 230V connection

→ *Disconnect the plug (*Fig. 42*/1) from the extension cable or press Emergency Stop.*

6.2.2 Switching the machine on/off via the combustion engine

See also operating instructions for the combustion engine (see supplier documents in appendix of machine record).

!

NOTICE!

Voltage drop of the starter battery!

Frequent starting of the combustion engine can cause a voltage drop of the starter battery.

– Avoid frequent starting of the combustion engine.

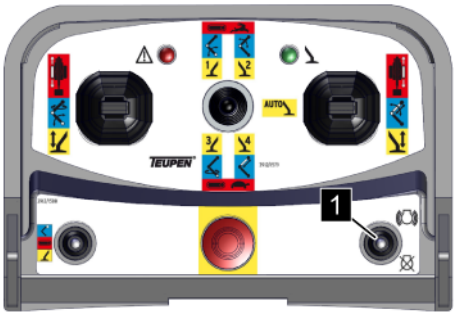

Fig. 43: Engine switch

Switching on and off during operation is done using the engine switch (Fig. 43/1) at the control panel.

Switching on

Fig. 44: Switching on the combustion engine

1. *To start the combustion engine press the motor switch (*Fig. 44*) upwards. Immediately let go of the motor switch once the combustion engine starts.*

> **NOTICE!**
> Long starting processes can cause damage to the starter.

2. *Let the combustion engine warm up for approximately 15 seconds before starting to operate the aerial access platform.*

Switching off

Fig. 45: Switching off the combustion engine

- *To switch off the combustion engine push the motor switch (*Fig. 45*) downwards to and hold it until the combustion engine stops.*

6.3 Shutting down in case of emergency

In dangerous situations, movements of components must be stopped as quickly as possible and the power supply switched off.

In case of emergency, proceed as follows:

1. *Trigger immediate emergency stop with Emergency Stop button.*
2. *If there is no danger to your own health, rescue people in the danger zone.*

Operation

3. *If necessary, start first aid measures.*
4. *Inform the fire brigade and/or rescue service.*
5. *Inform responsible people in the deployment location.*
6. *Switch off the machine and secure against switching on again.*

6.4 Moving the machine

Personnel:	■ Trained people
Protective equipment:	■ Protective clothing ■ Safety boots ■ Protective helmet ■ Safety harness

Operation

WARNING!

Danger of injury due to improper moving of the aerial access platform!

There is a danger of severe injuries or even death due to improper moving of the aerial access platform.

- Only move machine in transport position.
- While in the working basket, always put on a safety harness and hook into the attachment points provided.
- Always perform all work with at least two people, whereby one person must remain on the ground in order to activate the emergency control if necessary.
- Do not exceed maximum working basket load of 200 kg.
- Heed openings in the floor when moving.
- Do not drive over materials with sharp edges.
- Do not make any abrupt changes of direction.
- In case of stop on an incline, secure the machine against rolling away.
- Make sure that the ladder is folded up and locked.
- When moving across the slope (max. 10.5° or 20 %), do not stay on the down slope side next to the aerial access platform.
- In case of moving on an incline (max. 14.5° or 26 %), do not stay on the down slope behind the aerial access platform.
- Only go up and down slopes forwards.
- Avoid contact of the crawler tracks with oil, gasoline, diesel and salt, and clean if necessary.

Moving the machine can either be carried out from the working basket or with the control panel as cable remote control.

1. *Switch on the machine (↳ Chapter 6.2 'Switching the machine on/off' on page 63).*

2. *Set the function selection switch* (Fig. 46) *in centre position to [chain function] (red).*

Fig. 46: Function selection switch

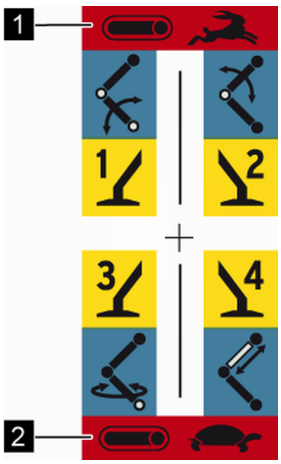

Fig. 47: Move function

3. *With the pre-selection lever select [fast]* (Fig. 47/1) *or [crawl speed]* (Fig. 47/2).

4. *Move machine according to ↳ 'Table "Moving the machine"' on page 71:*

> *By pressing the control levers slowly, the speed can be adapted.*

> *The machine may only be operated in crawl speed when on slopes or inclines.*

Operation

Table "Moving the machine"

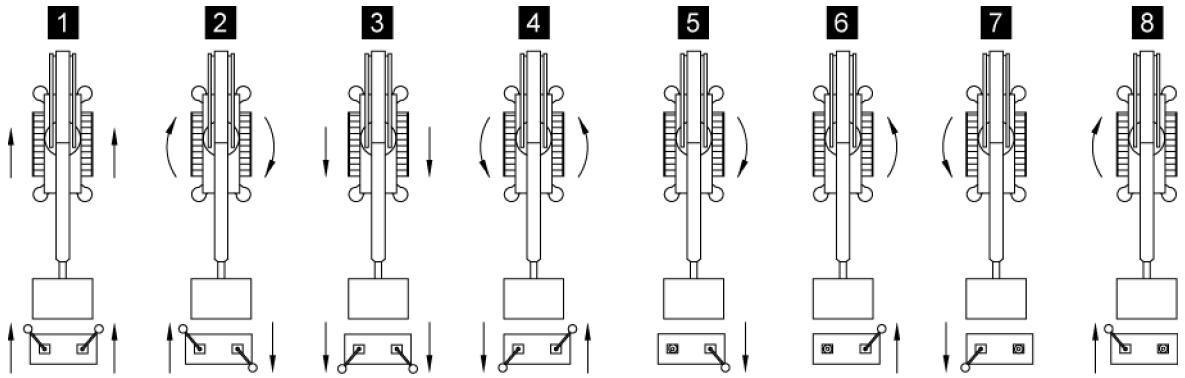

Fig. 48: Driving directions

No.	Operation	Effect
1	Press both control levers forwards	The machine moves forwards
2	Press left control lever forwards and pull right control lever backwards	Machine turns clockwise on the spot
3	Pull both control levers backwards	The machine moves backwards
4	Pull left control lever backwards and push right control lever forwards	Machine turns anti-clockwise on the spot
5	Pull only the right control lever backwards	The machine turns backwards in a clockwise direction
6	Press only the right control lever forwards	The machine turns forwards in an anti-clockwise direction
7	Pull only the left control lever backwards	The machine turns backwards in an anti-clockwise direction
8	Press only the left control lever forwards	The machine turns forwards in a clockwise direction

The possible turning radius can vary depending on the surface properties. Due to small turning radii, the crawler track is loaded more heavily and will wear faster.

6.5 Putting the machine in work position

Personnel:
- Trained people

Protective equipment:
- Protective clothing
- Safety boots
- Protective helmet
- Safety harness

WARNING!

Danger of injury due to improper bracing!

With improper bracing, the machine can tip or slide. This can cause severe injuries and significant property damage.

– Always put the safety harness on when in the working basket.
– Always perform all work with at least two people.
– Ensure sufficient load capacity of the subsurface (*Chapter 3 'Technical data' on page 39*).
– Heed maximum guard rail angle (*Chapter 3 'Technical data' on page 39*).
– If necessary, use base plates.
– Make sure that the base plates are aligned horizontally (maximum deviation of ± 8°).
– Do not anchor the outriggers with chains, ropes, pegs, etc.
– Always observe the movement of the outriggers when extending.
– Make sure that no people, supply lines or other objects are in the area around the outriggers.

In order to put the machine in work position, the outriggers can be extended manually or automatically. Bracing the machine can optionally be carried out from the basket or with the control panel as cable remote control.

6.5.1 Manual bracing

Manual bracing

Fig. 49: Function selection switch

1. *Switch on the machine (↳ Chapter 6.2 'Switching the machine on/off' on page 63).*
2. *Set function selection switch (*Fig. 49*) to [outrigger function] (yellow).*

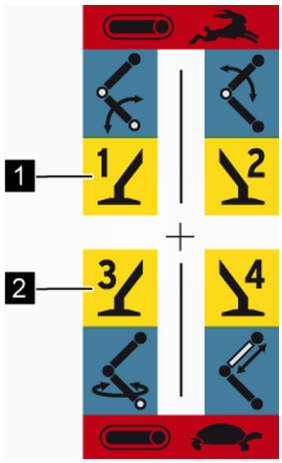

Fig. 50: Outrigger function

3. *With the pre-selection lever select the outriggers 1 and 2 (*Fig. 50/1*) or 3 and 4 (*Fig. 50/2*).*

4. *Extend the outriggers evenly according to the table:*

Pre-selection lever position	Operation	Symbol	Effect
	*Press left control lever forwards*		*Outrigger 1 extends*
	Press right control lever forwards		*Outrigger 2 extends*
	*Press left control lever forwards*		*Outrigger 3 extends*
	Press right control lever forwards		*Outrigger 4 extends*

By pressing the control levers slowly, the speed of the outriggers can be adapted.

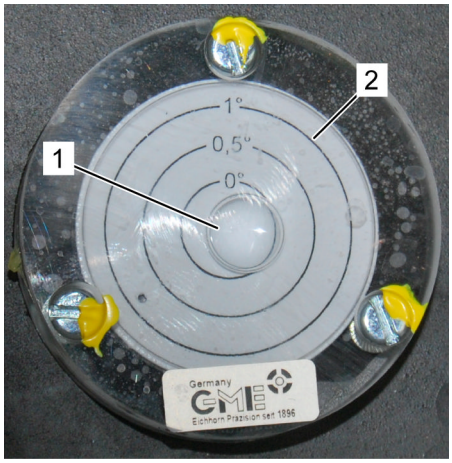

Fig. 51: Circular level

5. *Bring the chassis in a horizontal position by aligning the outriggers according to the circular level (Fig. 51) (Item no. 4001/0298). The bubble (Fig. 51/1) of the circular level must be within the 1° circle (Fig. 51/2).*

⇨ *With proper bracing, the green light on the control panel remains lit.*

6.5.2 Automatic bracing

Fig. 52: Function selection switch

1. *Switch on the machine (⇨ Chapter 6.2 'Switching the machine on/off' on page 63).*
2. *Set function selection switch (*Fig. 52*) to [outrigger function] (yellow).*

Fig. 53: Automatic bracing

3. *Using the pre-selection lever, select the [auto function] (*Fig. 53*) (centre position).*
4. *Extend the outriggers evenly according to the table:*

> *When bracing on an inclined surface, heed the following: press the control lever for automatic bracing (full speed for downward movement of the outriggers) only until all support pads have made contact with the ground. Then throttle back the speed by approximately 50% by pulling the control lever back.*

Pre-selection lever position	***Operation***	***Symbol***	***Effect***
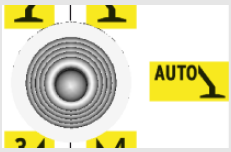	*Press left or right control lever forwards*	 	*All outriggers extend simultaneously*

⇨ *The chassis aligns itself horizontally automatically.*

WARNING!

Danger of injury due to uneven lifting!

With uneven lifting, the machine can tip or slide. This can cause severe injuries and significant property damage.

– In case of uneven lifting, cancel the process immediately and align the machine manually.
– Have the automatic bracing checked by Service.

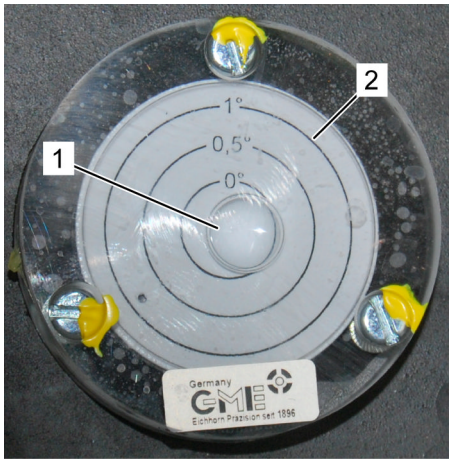

Fig. 54: Circular level

5. *Check alignment on the circular level (*Fig. 54*) (Item no. 4001/0298). The bubble (*Fig. 54*/1) of the circular level must be within the 1° circle (*Fig. 54*/2).*

⇨ *With proper bracing, the green light on the control panel remains lit.*

6.6 Operating the machine

Personnel:
- Trained people

Protective equipment:
- Protective clothing
- Safety boots
- Protective helmet
- Safety harness

WARNING!

Danger of injury due to improper operation!

Improper operation can cause severe injuries and significant property damage.

- While in the working basket, always wear a safety harness, do not swing or move jerkily.
- Always perform all work with at least two people, whereby one person must remain on the ground in order to activate the emergency control if necessary.
- Make sure that the ladder is folded up and locked.
- Do not climb onto the safety fence around the basket.
- Do not work on or near high-voltage lines.
- Watch out for high obstacles.
- Make sure that when moving the working basket, no body parts are crushed, e.g. against a wall.
- At wind speeds above 12.5 m/s (wind strength 6), stop work immediately.

1. *Put the machine in working position (↳ Chapter 6.5 'Putting the machine in work position' on page 72).*

2. *Set function selection switch (*Fig. 55*) to [platform function] (blue).*

Fig. 55: Function selection switch

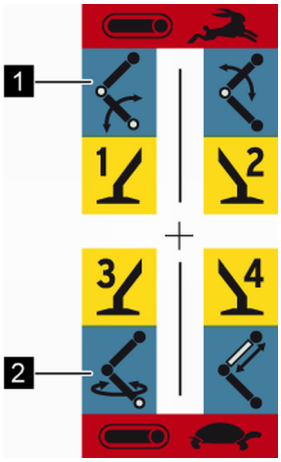

Fig. 56: Platform function

3. *Select the platform functions (Fig. 56/1 or 2) with the pre-selection lever.*

> *If the upper boom is still in the transport position, the lower boom must be lifted first so that the upper boom comes out of the transport lock.*

4. *Operate the platform according to the table:*

Pre-selection lever position	Operation	Symbol	Effect
	*Press left control lever forwards*		*Lift the lower boom*
	Pull left control lever backwards		*Lower the lower boom*
	Press right control lever forwards		*Lift the upper boom*
	Pull right control lever backwards		*Lower the upper boom*
	*Press left control lever forwards*		*Swivel the platform clockwise (seen from above)*
	Pull left control lever backwards		*Swivel the platform anti-clockwise (seen from above)*
	Press right control lever forwards		*Extend the upper boom*
	Pull right control lever backwards		*Retract the upper boom*

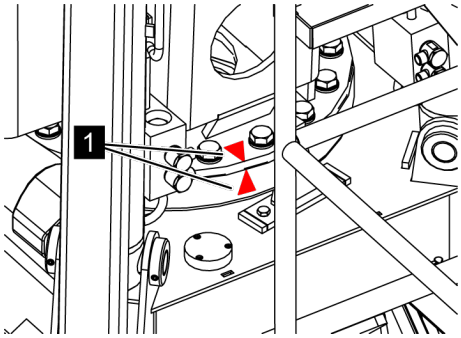

Fig. 57: Red arrows

NOTICE!

Property damage due to incorrectly-aligned platform!

If the platform is not aligned correctly, the transport locks can be damaged when moving in.

– Make sure that the red arrows (Fig. 57/1) on the rotating assembly are aligned with one another when moving into the transport position.

By pressing the control levers slowly, the speed of the platform can be adapted.

6.7 Putting the machine in transport position

Personnel:
- Trained people

Protective equipment:
- Protective clothing
- Safety boots
- Protective helmet
- Safety harness

Definition of transport position:

- The outriggers (Fig. 58/1) are retracted.
- The lower boom (Fig. 58/2) is on the transport lock (Fig. 58/3).
- The upper boom (Fig. 58/5) is on the transport lock (Fig. 58/4).

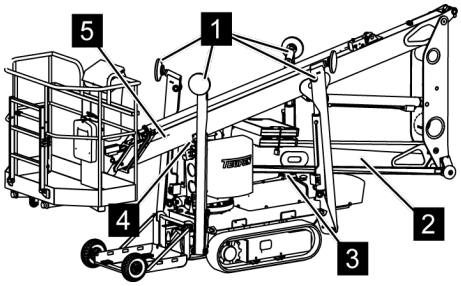

Fig. 58: Transport position

WARNING!

Danger of injury when lowering!

Due to uneven lowering of the outriggers, the machine can tip or slide. This can cause severe injuries and significant property damage.

- Always put the safety harness on when in the working basket.
- Always perform all work with at least two people.
- Always observe the movement of the outriggers and of the chassis while retracting.
- Make sure that no limbs or supply lines are underneath the crawler chassis.
- Lower the machine evenly.

By pressing the control levers slowly, the speed of the platform can be adapted.

In order to put the machine in transport position, the outriggers can be retracted manually or automatically. Lowering the machine can optionally be carried out from the working basket or with the control panel as remote control.

Manual control

1. *Switch on the machine (↳ Chapter 6.2 'Switching the machine on/off' on page 63).*
2. *If necessary, retract the upper boom (↳ Chapter 6.6 'Operating the machine' on page 77).*
3.

NOTICE!

Property damage due to incorrectly-aligned platform!

If the platform is not aligned correctly, the transport locks can be damaged when moving in.

Put the platform in transport position (↳ Chapter 6.6 'Operating the machine' on page 77).

*Ensure that the red arrows are across from one another (*Fig. 59/1*).*

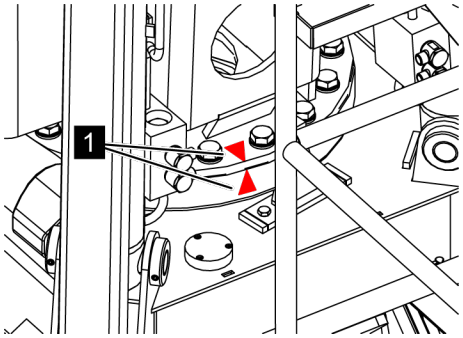

Fig. 59: Red arrows

Operation

Fig. 60: Function selection switch

4. *Lower upper boom completely (↳ Chapter 6.6 'Operating the machine' on page 77).*

5. *Set function selection switch (*Fig. 60*) to [outrigger function] (yellow).*

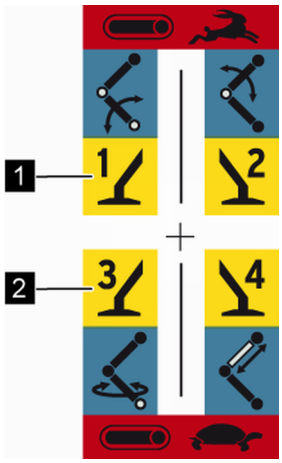

Fig. 61: Outrigger function

6. *With the pre-selection lever select the outriggers 1 and 2 (*Fig. 61/1*) or 3 and 4 (*Fig. 61/2*).*

7. *Retract the outriggers evenly according to the table:*

Pre-selection lever position	*Operation*	*Symbol*	*Effect*
	*Press left control lever forwards*		*Outrigger 1 retracts*
	Press right control lever forwards		*Outrigger 2 retracts*
	*Press left control lever forwards*		*Outrigger 3 retracts*
	Press right control lever forwards		*Outrigger 4 retracts*

By pressing the control levers slowly, the speed at which the outriggers retract can be adapted.

Automatic control

1. *Switch on the machine (☞ Chapter 6.2 'Switching the machine on/off' on page 63).*
2. *If necessary, retract the upper boom (☞ Chapter 6.6 'Operating the machine' on page 77).*

Operation

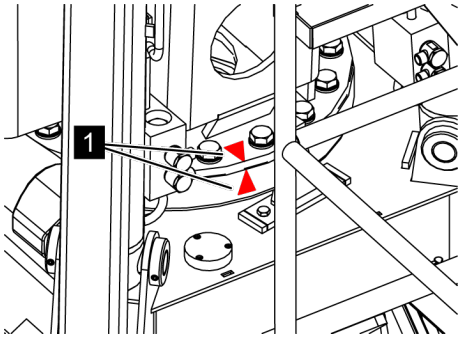

Fig. 62: Red arrows

3.

> **NOTICE!**
> **Property damage due to incorrectly-aligned platform!**
> If the platform is not aligned correctly, the transport locks can be damaged when moving in.

Put the platform in transport position (↳ Chapter 6.6 'Operating the machine' on page 77).

*Make sure that the red arrows (*Fig. 62/1*) on the rotating assembly are aligned with one another when moving into the transport position.*

4. *Lower upper boom completely (↳ Chapter 6.6 'Operating the machine' on page 77).*

5. *Set function selection switch (*Fig. 63*) to [outrigger function] (yellow).*

Fig. 63: Function selection switch

Fig. 64: Automatic lowering

6. *Using the pre-selection lever, select the [auto function] (*Fig. 64*) (centre position).*

7. *Retract the outriggers evenly according to the table:*

Pre-selection lever position	***Operation***	***Symbol***		***Effect***
	*Pull left or right control lever backwards*			*All outriggers retract simulta-neously*

> *By pressing the control levers slowly, the speed at which the outriggers retract can be adapted.*

6.8 Height and width adjustment crawler chassis (optional)

Personnel:
- Trained people

Protective equipment:
- Protective clothing
- Safety boots
- Protective helmet

WARNING!

Danger of injury due to improper height/ width adjustment!

With improper height/width adjustment, the machine can tip or slide. This can cause severe injuries and significant property damage.

– Always perform all work with at least two people.

Both crawler chassis can be adjusted independently of one another in their height and thus simultaneously in their width.

Moving out crawler chassis

1. *Switch on the machine (↳ Chapter 6.2 'Switching the machine on/off' on page 63).*
2. *Put the machine in working position (↳ Chapter 6.5 'Putting the machine in work position' on page 72).*
3. *Lift the machine up using the outriggers until the crawler chassis is unloaded (*Fig. 65*/h = max. 20 mm) (↳ Chapter 6.5 'Putting the machine in work position' on page 72).*

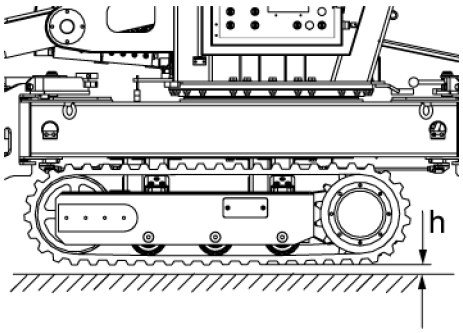

Fig. 65: Unload the crawler chassis

Operation

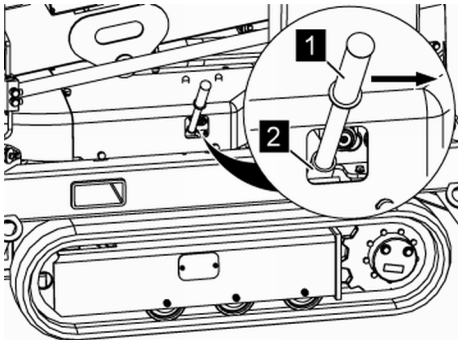

Fig. 66: Locking lever

4. *Insert the locking lever (*Fig. 66/*1) for the chassis adjustment in the locking bolts (*Fig. 66/*2).*

> *The locking lever for the chassis adjustment is located behind the control box cover.*

5.

> **WARNING!**
> **Danger of injury due to crushing between crawler chassis and floor!**
> When operating the chassis adjustment, there can be severe injuries due to crushing between the crawler chassis and the floor.
> – Make sure that there are no limbs between the crawler chassis and the floor.

*Release the locking mechanism by pressing the locking lever (*Fig. 66/*1) in the direction of the arrow.*

⇨ *The crawler chassis slips out down to the floor.*

6. *Let go of the locking lever (*Fig. 66/*1) and remove.*

7. *Carefully continue to lower the outriggers on the side of the crawler chassis to be moved out, meaning lift the chassis on this side, until the crawler chassis loses contact with the floor (↳ Chapter 6.5 'Putting the machine in work position' on page 72).*

⇨ *The crawler chassis extends until the locking bolt audibly latches in.*

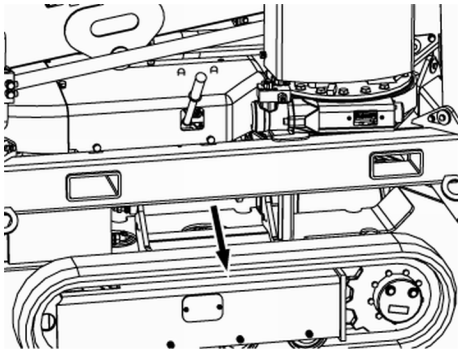

Fig. 67: Moving out crawler chassis

Moving in the crawler chassis

1. *Switch on the machine (↳ Chapter 6.2 'Switching the machine on/off' on page 63).*

2. *Put the machine in working position (↳ Chapter 6.5 'Putting the machine in work position' on page 72).*

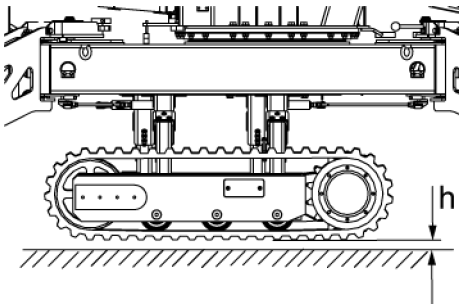

Fig. 68: Unload the crawler chassis

3. *Lift the machine up using the outriggers until the crawler chassis is unloaded (*Fig. 68/*h = max. 20 mm) (↳ Chapter 6.5 'Putting the machine in work position' on page 72).*

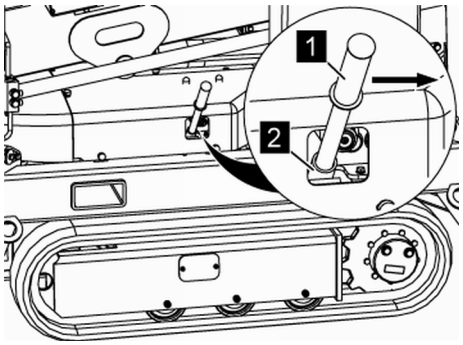

Fig. 69: Locking lever

4. *Insert the locking lever (*Fig. 69/*1) for the chassis adjustment in the locking bolts (*Fig. 69/*2).*

> *The locking lever for the chassis adjustment is located behind the control box cover.*

> **WARNING!**
> **Danger of injury due to crushing between crawler chassis and floor!**
> When operating the chassis adjustment, there can be severe injuries due to crushing between the crawler chassis and the floor.
> – Make sure that there are no limbs between the crawler chassis and the floor.

5. *Release the locking mechanism by pressing the locking lever (*Fig. 69/*1) in the direction of the arrow.*

⇨ *The crawler chassis slips out down to the floor.*

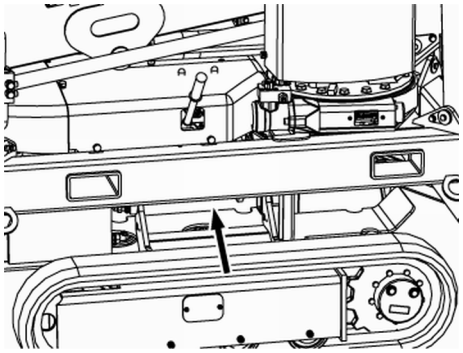

Fig. 70: Moving in the crawler chassis

6. *Hold the locking lever (*Fig. 69/*1) in an open position and carefully lift the two outriggers on the crawler chassis side (meaning lowering the chassis on that side) in order for the crawler chassis to insert (↳ Chapter 6.5 'Putting the machine in work position' on page 72).*

7. *Let go of the locking lever (*Fig. 69/*1) and remove.*

8. *Keep lowering the chassis until the locking bolt audibly latches in.*

6.9 Changing the working basket

Personnel:
- Trained people

Protective equipment:
- Protective clothing
- Safety boots
- Protective helmet

It is recommended that you change the working basket with two people.

Removing the working basket

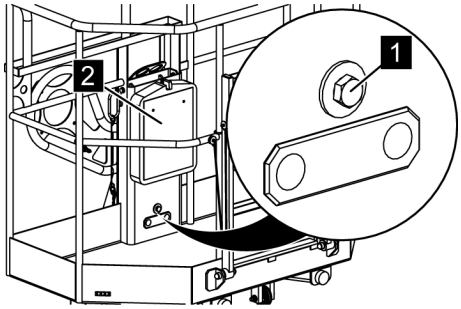

Fig. 71: Mounting screw working basket

1. *Put the machine in transport position (↳ Chapter 6.7 'Putting the machine in transport position' on page 79).*
2. *Remove the provided open-ended wrench from the document box (*Fig. 71*/2).*
3. *Use open-ended wrench to loosen mounting screw (*Fig. 71*/1).*

The mounting screw (Fig. 71/1) remains in the hole of the working basket.

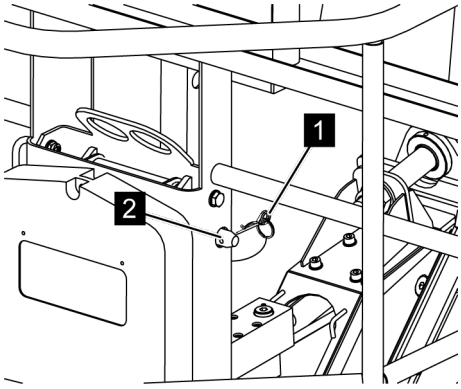

Fig. 72: Pulling out the spring cotter pin

4. *Pull the spring cotter pin (*Fig. 72*/1) out of the fastening bolts (*Fig. 72*/2).*

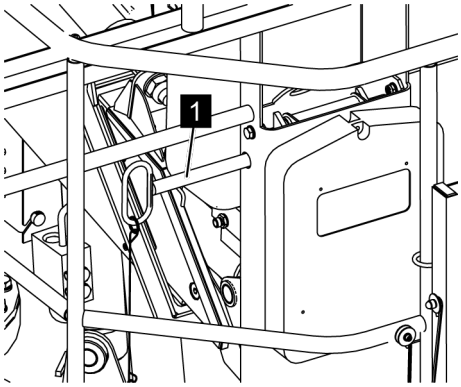

Fig. 73: Pulling out the fastening bolts

5. *Pull out the fastening bolts (*Fig. 73*/1).*

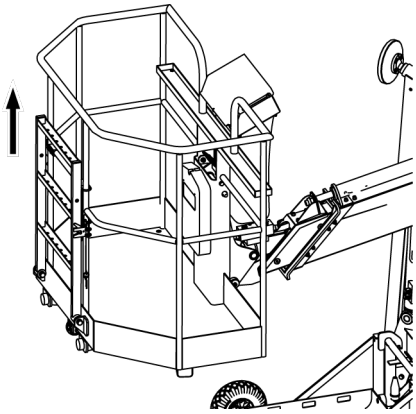

Fig. 74: Lifting the working basket

6. *Lift the working basket slightly until it can be tipped.*

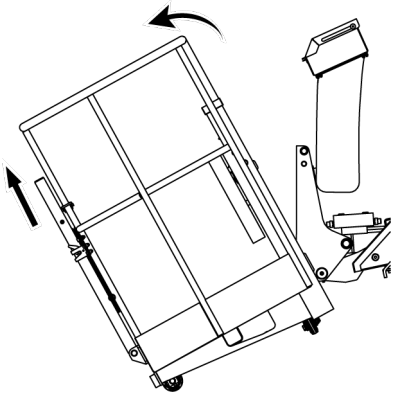

Fig. 75: Pulling out the working basket

7. *Tip the working basket and pull out at an angle.*

> *For easier moving of the working basket, two rollers are attached to the bottom. By tipping it appropriately, the working basket can be moved on the rollers.*

Operation

Inserting the working basket

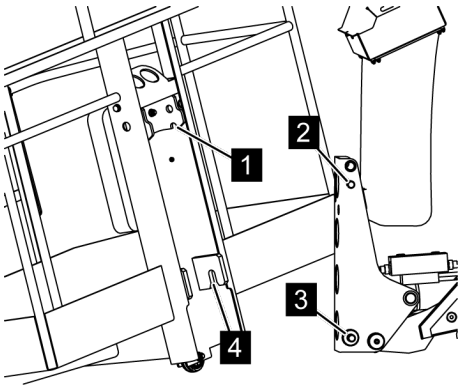

Fig. 76: Inserting the working basket

8. *Insert the working basket at an angle with the adapter (*Fig. 76*/4) on the bolts (*Fig. 76*/3).*

9. *Press the working basket in the direction of the machine and move it with the attachments (*Fig. 76*/1) on the bolts (*Fig. 76*/2).*

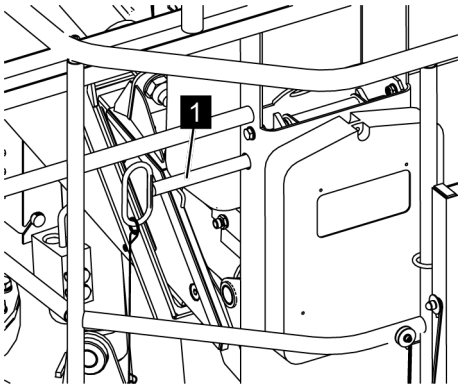

Fig. 77: Inserting the fastening bolts

10. *Insert the fastening bolts (*Fig. 77*/1).*

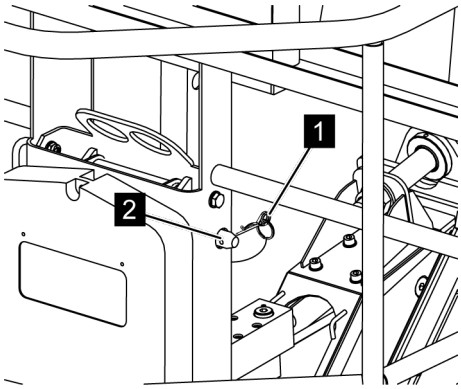

Fig. 78: Securing the fastening bolts

11. *Secure the fastening bolts (*Fig. 78*/2) with the spring cotter pin (*Fig. 78*/1).*

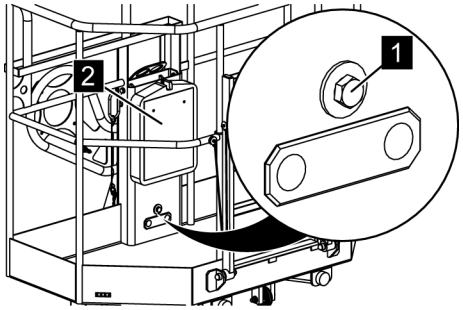

Fig. 79: Mounting screw working basket

12. *Use open-ended wrench to tighten mounting screw (*Fig. 79*/1).*
13. *Check screw connection for correct and tight fit (tightening torque about 20 Nm).*
14. *Return the open-ended wrench to the document box (*Fig. 79*/2).*

6.10 Operate lifting device (optional)

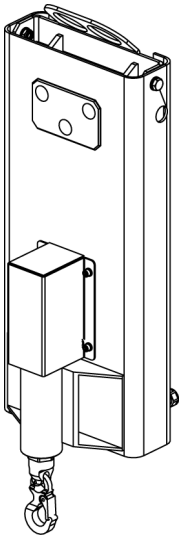

Fig. 80: Lifting device

Optionally, a lifting device (Fig. 80) can be mounted instead of the working basket. Operation takes place via the cable remote control. For this, an extension cable must be connected between the plug connection of the control console in the working basket and the cable remote control. See also the separate operating instructions for the lifting device.

The lifting device is optional. To operate, follow the operating instructions attached to the machine file.

6.11 Emergency operation

Personnel:
- Trained people

Protective equipment:
- Protective clothing
- Safety boots
- Protective helmet

The aerial lift platform has an emergency operation mode which allows operation of the aerial access platform even without a voltage supply.

Operation

WARNING!

Risk of injury due to improper machine movements!

Inadvertent machine movements can tip the machine over. This can cause severe injuries or even death.

- The emergency operation is only intended for sideways, moving in and turning motions in the direction of the transport position.
- First move the platform in the transport position. Only then move the outriggers in the transport position.

1. *Pull the mains plug.*

2. *Loosen the knurled thumb screws of the cover (*Fig. 81*/1 and 2) and remove the cover.*

Fig. 81: Removing the cover

The valves for platform operation (↳ Chapter 6.13.1 'Valve setting for platform' on page 99) are under the cover (Fig. 81/1) and the valves for outrigger operation (↳ Chapter 6.13.2 'Valve setting outriggers' on page 101) are under the cover (Fig. 81/2).

3. *Remove the hand lever (*Fig. 82*/1) and screw into the adaptor ends (*Fig. 82*/2) of the hand pump.*

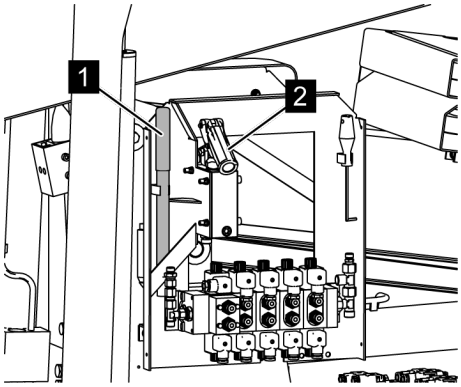

Fig. 82: Hand lever

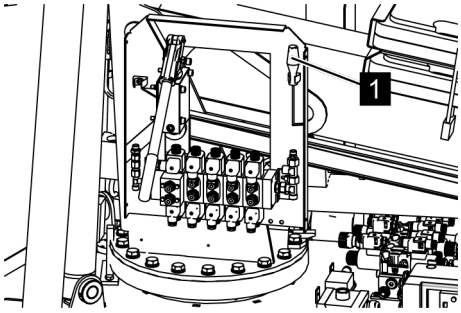

Fig. 83: Operating lever

4. *Take out the operating lever (*Fig. 83*/1).*

Operating lever item no. 5500/1148

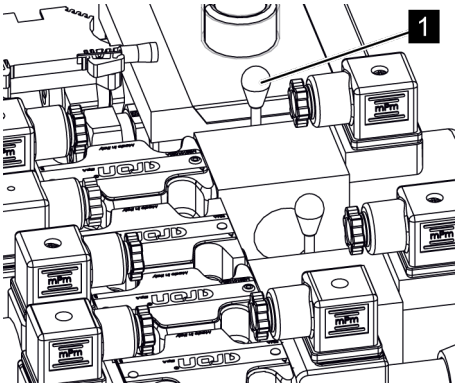

Fig. 84: Unscrew emergency hand activator

5. *Unscrew and remove the emergency hand lever (*Fig. 84*/1) of the crawler chassis valve.*

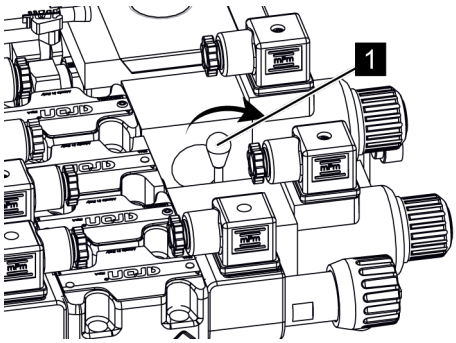

Fig. 85: Adjusting outrigger and platform functions

6. *Using the lever (*Fig. 85*/1), turn the 'outrigger and platform' valve to the right to the outrigger and platform function (*Fig. 85*/1).*

Operation

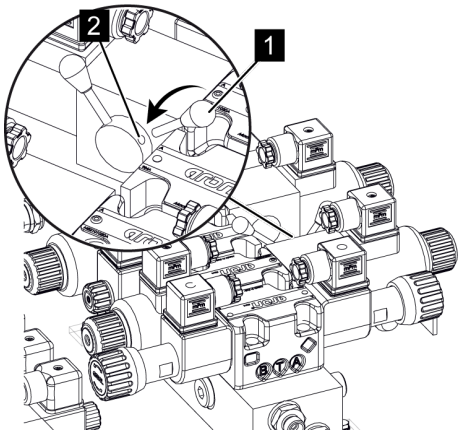

Fig. 86: Screw in the emergency hand activator

7. *Screw the emergency hand lever (*Fig. 86*/1) into the 'outrigger and platform' (*Fig. 86*/2) valve so that it is locked on outrigger and platform function.*

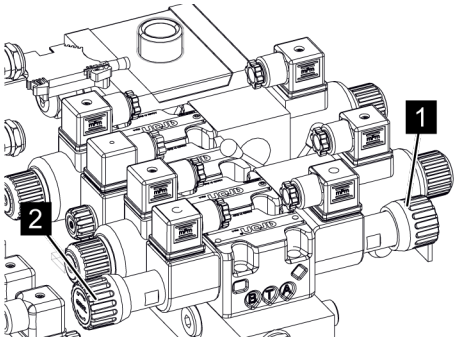

Fig. 87: Activating function

8. *For **outrigger operation**, screw the valve (*Fig. 87*/1) in clockwise up to the stop.*

*For **platform operation**, screw the valve (*Fig. 87*/2) in clockwise up to the stop.*

> *Always screw in only one valve (Fig. 87/1 or 2). The other one must be unscrewed.*

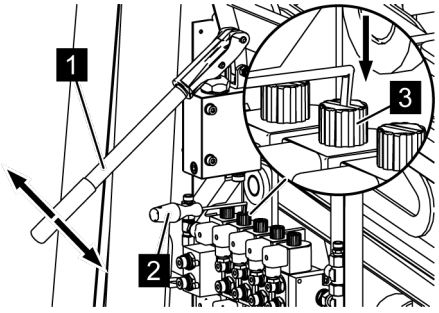

Fig. 88: Activating the valve

9.

> *These are black-white valves, that is, the speed of the platform movement cannot be regulated. There are only the positions "open" or "closed".*

*Activate the desired valve (*Fig. 88*/3) by pressing in with the operating lever (*Fig. 88*/2) and simultaneously pumping with the hand pump (*Fig. 88*/1).*

10. *Move the machine according to* *↳ Chapter 6.13 'Valve settings' on page 99* *until the desired position is reached.*

11. *Remove the operating lever.*

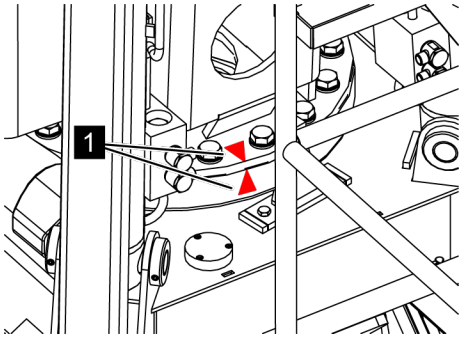

Fig. 89: Red arrows

NOTICE!

Property damage due to incorrectly-aligned platform!

If the platform is not aligned correctly, the transport locks can be damaged when moving in.

– Make sure that the red arrows (Fig. 89/1) on the rotating assembly are aligned with one another when moving into the transport position.

6.12 Service operation

Definition of service operation

Operation of aerial access platform without safety functions, using only the hydraulic control without support of the control. Fully hydraulic operation with power supply from electric motor or combustion engine. In this case, use of the control is not intended since this can create problems.

Service operation is only permitted when the aerial access platform is in perfect technical condition. Service operation can be required or useful, for instance, during maintenance work.

The service operation is divided into platform, outrigger and chain function.

Service operation is not emergency operation!

6.12.1 Service operation bracing and platform functions

Personnel:
- Trained people

Protective equipment:
- Protective clothing
- Safety boots
- Protective helmet

1. *Switch on the machine (↳ Chapter 6.2 'Switching the machine on/off' on page 63).*

2. *Remove the cover (*Fig. 90*/1 and 2).*

> *The valves for platform operation (↳ Chapter 6.13.1 'Valve setting for platform' on page 99) are under the cover (Fig. 90/1) and the valves for outrigger operation (↳ Chapter 6.13.2 'Valve setting outriggers' on page 101) are under the cover (Fig. 90/2).*

Fig. 90: Removing the cover

3. *Unscrew and remove the emergency hand lever (*Fig. 91*/1) of the crawler chassis valve.*

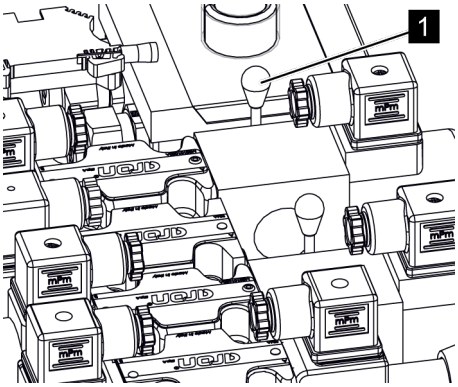

Fig. 91: Unscrew emergency hand activator

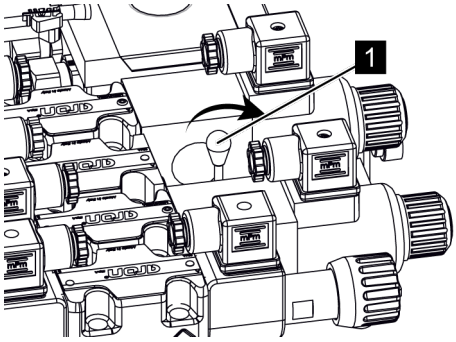

Fig. 92: Adjusting outrigger and platform functions

4. *Using the lever (*Fig. 92*/1), turn the 'outrigger and platform' valve to the right to the outrigger and platform function (*Fig. 93*/1).*

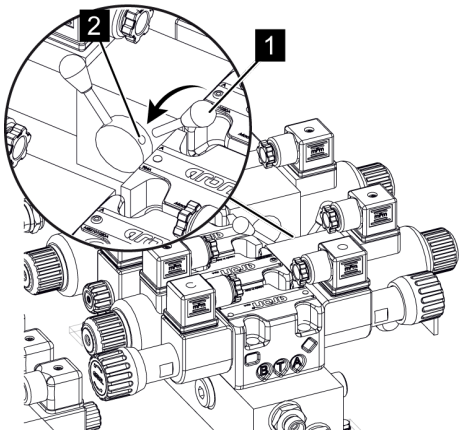

Fig. 93: Screw in the emergency hand activator

5. *Screw the emergency hand lever (*Fig. 93*/1) into the 'outrigger and platform' (*Fig. 93*/2) valve so that it is locked on outrigger and platform function.*

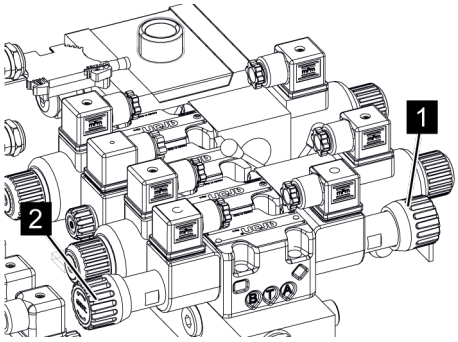

Fig. 94: Activating function

6. *For **outrigger operation**, screw the valve (*Fig. 94*/1) in clockwise up to the stop.*

*For **platform operation**, screw the valve (*Fig. 94*/2) in clockwise up to the stop.*

> *Always screw in only one valve (Fig. 94/1 or 2). The other one must be unscrewed.*

7. *To carry out the desired machine movements, press the valves for outrigger and platform function according to the valve setting*
Chapter 6.12.1 'Service operation bracing and platform functions' on page 95 *and at the same time, press the green button for the service operation.*

8. *After completing work, unlock all valves again.*

6.12.2 Service operation chain function

To drive the crawler chassis in service operation, it is not necessary to lock valves.

Personnel:
- Trained people

Protective equipment:
- Protective clothing
- Safety boots
- Protective helmet

1. *Establish voltage supply.*

2. *Loosen the knurled thumb screws of the cover (*Fig. 95*/1 and 2) and remove the cover.*

Fig. 95: Removing the cover

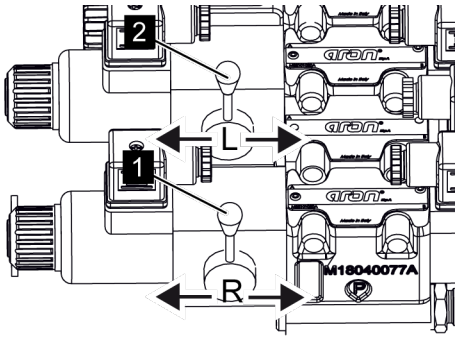

Fig. 96: Driving the crawler chassis

3. *To drive the* ***right crawler chassis****, press the green button for service operation and the front emergency hand lever (*Fig. 96*/1) at the same time:*

Emergency hand lever to the right	*- right crawler chassis drives forward*
Emergency hand lever to the left	*- right crawler chassis drives backward*

To drive the ***left crawler chassis****, press the green button for service operation and the rear emergency hand lever (*Fig. 96*/2) at the same time:*

Emergency hand lever to the right	*- left crawler chassis drives forward*
Emergency hand lever to the left	*- left crawler chassis drives backward*

The left and right crawler chassis can also be driven simultaneously. To do this, press the green button for service operation and turn the corresponding emergency hand levers in the desired direction.

6.13 Valve settings

6.13.1 Valve setting for platform

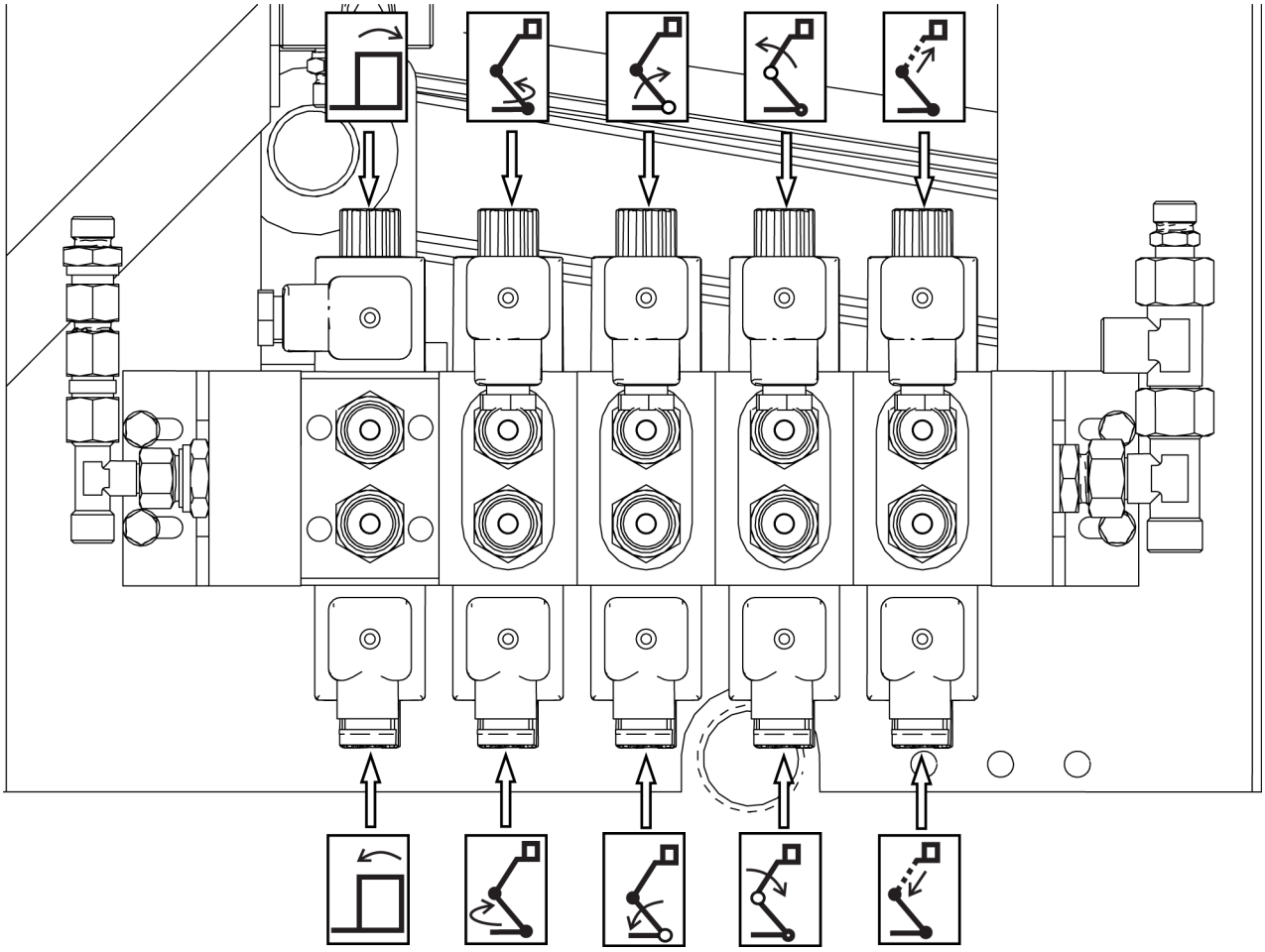

Fig. 97: Valve setting for platform

Explanation of symbols for upper valve row				
				
Tip working basket forwards	Swivel the platform anti-clockwise (seen from above)	Lift the lower boom	Lift the upper boom	Extend the transport of the upper boom

Explanation of symbols for lower valve row				
				
Tip working basket back-wards	Swivel the plat-form clockwise (seen from above)	Lower the lower boom	Lower the upper boom	Retract the transport of the upper boom

6.13.2 Valve setting outriggers

The valves for outrigger operation are numbered sequentially according to the outrigger number.

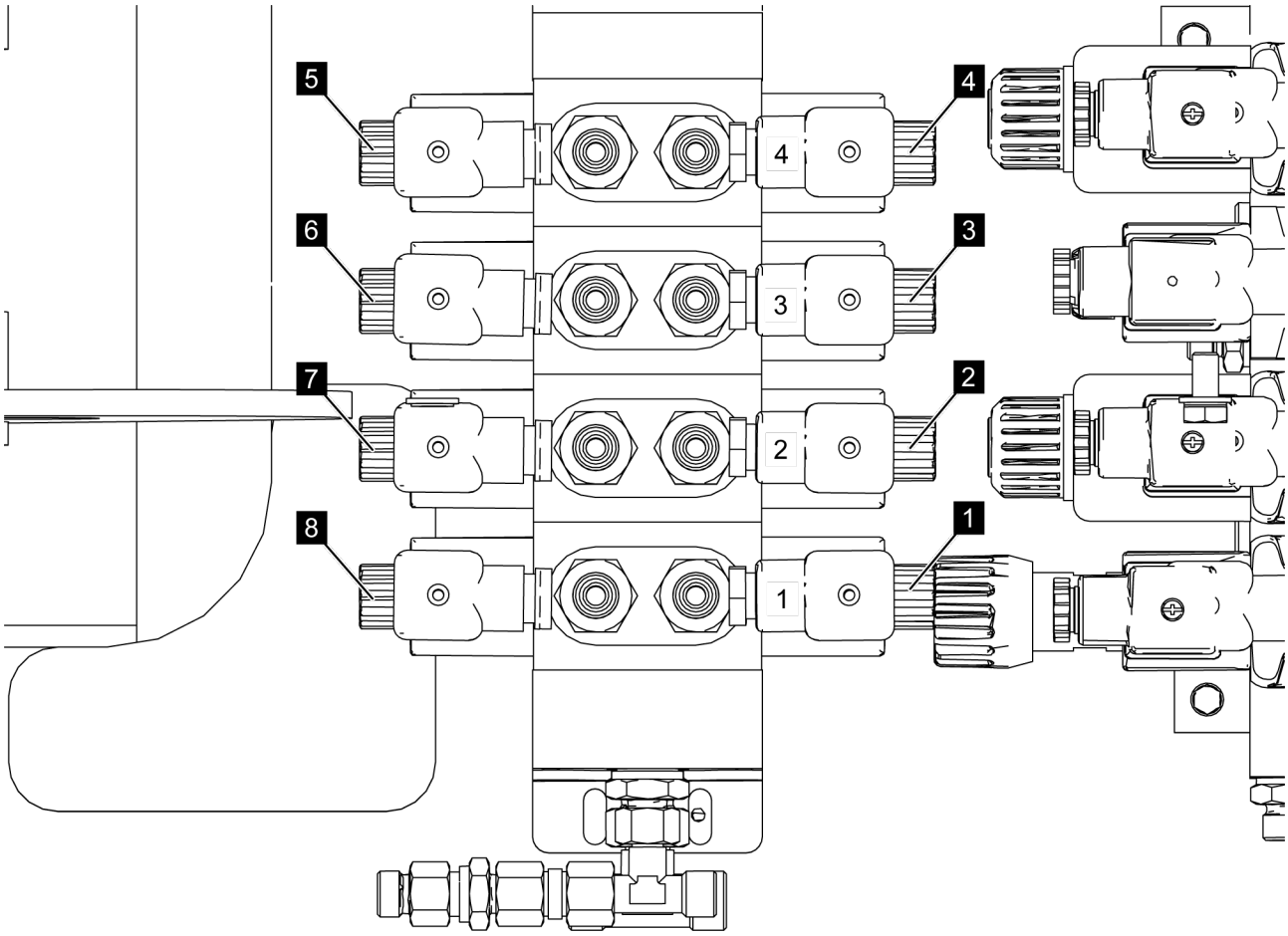

Fig. 98: Valve setting outriggers

1 Retract outrigger 1
2 Retract outrigger 2
3 Retract outrigger 3
4 Retract outrigger 4
5 Extend outrigger 4
6 Extend outrigger 3
7 Extend outrigger 2
8 Extend outrigger 1

7 Maintenance

7.1 Safety instructions for maintenance

Securing to prevent restart

WARNING!

Danger to life from an unauthorised restart!

In the event of an unauthorised restart of the power supply during maintenance, there is a danger of serious injuries or death for persons in the danger zone.

– Switch off all power supplies before starting work and make sure they cannot be switched on again.

Improperly-executed maintenance work

WARNING!

Danger of injury due to improperly-executed maintenance work!

Improper maintenance can cause severe injuries and significant property damage.

- Before starting work, ensure that there is sufficient assembly space.
- Make sure the assembly space is orderly and clean! Loosely-stacked components and tools or those left lying around are a source of accidents.
- Do not loosen connections sealed with yellow signal paint.
- If components have been removed, make sure they are assembled correctly, re-fit all fastening elements and adhere to screw tightening torques.
- Before recommissioning, heed the following points:
  - Make sure that all maintenance work is performed and completed according to the details and instructions in these instructions.
  - Make sure that there are no people in the danger zone.
  - Make sure that all covers and safety equipment are installed and functioning properly.

Hot surfaces

WARNING!

Danger of injury due to hot surfaces!

Surfaces of engine components can get heated up considerably during operation. Skin contact with hot surfaces causes severe burns to the skin.

- Avoid contact with engine components such as exhaust components, silencers, coolers, radiators, pipes and engine blocks.
- Check before all work on engine components, as to whether these are hot. If necessary, allow them to cool.

Hot operating materials

WARNING!

Danger of injury due to hot materials!

Operating materials (coolant liquids or motor oils) can attain high temperatures in use. Skin contact with hot materials causes severe burns to the skin.

– Avoid contact with hot operating materials.
– Check before all work with operating materials, as to whether these are hot. If necessary, allow them to cool.

Environmental protection

Observe the following environmental protection instructions during maintenance work:

- In respect of all lubrication points supplied manually with lubricant, remove any escaping, used or surplus grease and dispose of in accordance with applicable local regulations.
- Catch replaced oils in suitable containers and dispose of in accordance with applicable local regulations.

7.2 Maintenance plan

The next sections describe the maintenance work that is required for optimal and fault-free operation of the machine.

Insofar as increased wear can be detected during regular checks, the required maintenance intervals must be abbreviated according to the actual signs of wear. In case of questions about maintenance work and intervals, contact the manufacturer. See contact data on page 2.

7.2.1 Maintenance plan combustion engine

Robin-Subaru EX21

Also refer to the operating instructions of the manufacturer found in the appendix of the machine file.

Maintenance schedule of the optional Hatz diesel engine *↳ 'Hatz-Diesel 1B30 (optional)' on page 107.*

Interval	Maintenance work	Personnel
After the first 20 hours of operation	Change engine oil	Qualified personnel
Every 8 Bh or daily	Clean engine, check bolts and nuts	Trained people
	Check engine oil and top up	Trained people
Every 50 hours of operation or weekly	Clean air filter	Trained people
Every 100 hours of operation	Change engine oil	Qualified personnel
	Clean spark plugs	Qualified personnel
Every 200 hours of operation or monthly	Replace air filter insert	Qualified personnel
	Clean rough fuel filter	Qualified personnel
	Clean spark plugs and adjust electrodes	Qualified personnel
Every 300 hours of operation	Check/set valve play	Qualified personnel
Every 500 hours of operation	Remove any combustion residue from the cylinder head	Qualified personnel
	Clean and set exhaust	Qualified personnel
Every 1000 hours of operation	if required, overhaul engine	Qualified personnel
Every 2 years	Replace fuel lines	Qualified personnel

Maintenance

Hatz-Diesel 1B30 (optional)

Also refer to the operating instructions of the manufacturer found in the appendix of the machine file.

Interval	Maintenance work	Personnel
After the first 25 hours of operation	Change engine oil	Qualified personnel
	Check valve play and adjust (not on models with automatic valve play equalisation)	Qualified personnel
	Check bolt connections	Qualified personnel
Every 8 to 15 operating hours or prior to the daily start of work	Check oil level	Trained people
	Check lower part of the oil bath air filter for correct oil level and contamination, if required replace dirty oil	Trained people
	On models with cyclones, empty the dust collection container.	Trained people
	Check the intake area of the combustion and cooling air.	Trained people
	Check the air filter maintenance display	Trained people
	Check the water precipitator	Trained people
Every 250 operating hours or every 12 month (whichever occurs first)	Change engine oil	Qualified personnel
Every 250 hours of operation	Maintenance of the oil bath air filter	Qualified personnel
	Check valve play and adjust (not on models with automatic valve play equalisation)	Qualified personnel
	Clean the cooling air area	Trained people
	Check bolt connections	Qualified personnel
	Clean the exhaust sieve	Qualified personnel
Every 500 hours of operation	Replace the fuel filter	Qualified personnel

Interval	Maintenance work	Personnel
	Service the dry air filter	Qualified personnel
Every 1000 hours of operation	Clean the oil filter	Qualified personnel

7.2.2 General maintenance plan

Interval	Maintenance work	Personnel
As necessary	Tension chain (↳ *Chapter 7.3.2 'Tensioning the chain' on page 111*)	Qualified personnel
	Replace filter insert (↳ *Chapter 7.3.6 'Replacing the filter insert' on page 117*)	Qualified personnel
	Clean machine (↳ *Chapter 7.3.1 'Cleaning' on page 110*)	Trained people
After the first 100 hours of operation	Tighten fastening screws on the rotating assembly (↳ *Chapter 7.3.8 'Rotating assembly tightening torques' on page 120*)	Qualified personnel
Every 700 hours of operation or at least twice a year	Tighten fastening screws on the rotating assembly (↳ *Chapter 7.3.8 'Rotating assembly tightening torques' on page 120*)	Qualified personnel
Weekly	Grease the grease nipple on the rotating assembly (↳ *Chapter 7.3.3 'Lubricating the rotating drive' on page 113*)	Qualified personnel
	Grease the grease nipple on the rotary drive (↳ *Chapter 7.3.7 'Lubrication plan' on page 118*)	Qualified personnel
	Lubricate the bolts (↳ *Chapter 7.3.7 'Lubrication plan' on page 118*)	Qualified personnel
	Check the hydraulic oil level (↳ *Chapter 7.3.4 'Checking the hydraulic oil level' on page 114*)	Qualified personnel
monthly	Lubricate transport guide slide bearing (↳ *Chapter 7.3.7 'Lubrication plan' on page 118*)	Qualified personnel
	Check hydraulic hoses for damage and leaks	Qualified personnel
	Check energy supply chains for wear and damage	Qualified personnel
Annually	Carry out annual maintenance according to "Check-list - Leo Maintenance -" (see Annex of Machine Record)	Expert
	Check the gearbox oil level (↳ *Chapter 7.3.5 'Check the gearbox oil level of the crawler chassis' on page 115*)	Qualified personnel
	Replace filter insert (↳ *Chapter 7.3.6 'Replacing the filter insert' on page 117*)	Qualified personnel
Every 6 years	Replace all hydraulic hoses	Hydraulics Specialist

7.3 Maintenance work

7.3.1 Cleaning

Personnel:
- Qualified personnel

Protective equipment:
- Protective clothing
- Safety boots

NOTICE!

Property damage due to improper cleaning!

Improper cleaning can cause damage to the machine.

– Do not use any acidic or aggressive cleaning agents.
– Remove all cleaning agents thoroughly with clear water.

1. *Pull the mains plug.*
2. *Make sure that all covers are mounted properly.*
3. *Loosen coarse dirt with the high-pressure cleaner. Do not clean the appropriately-marked components (*Fig. 99*) with the high-pressure cleaner.*
4. *Clean machine with a sponge, acid-free household cleanser and a water hose.*
5. *After cleaning the machine, lubricate it according to* *Chapter 7.3.7 'Lubrication plan' on page 118.*

Fig. 99: Cleaning forbidden

7.3.2 Tensioning the chain

Personnel:	■ Qualified personnel
Protective equipment:	■ Protective clothing ■ Safety boots
Special tool:	■ Grease gun
Materials:	■ Multi-purpose lubricant (Item no. 3917/0095)

1. *Put the machine in working position (↳ Chapter 6.5 'Putting the machine in work position' on page 72). The machine must be braced completely and the chains may no longer touch the floor.*

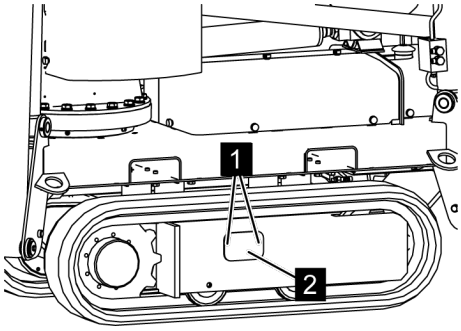

Fig. 100: Removing the cover

2. *Loosen the screws (*Fig. 100/*1) and remove the cover (*Fig. 100/*2).*

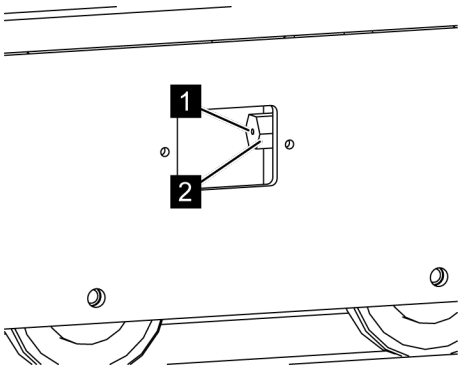

Fig. 101: Forcing in the lubricant

3. *Using a grease gun insert sufficient multi-purpose lubricant (Item no. 3917/0095) on the grease nipple (*Fig. 101/*1) of the tensioning cylinder (*Fig. 101/*2), until the chain has slack (*Fig. 102/*X) of 10–15 mm.*

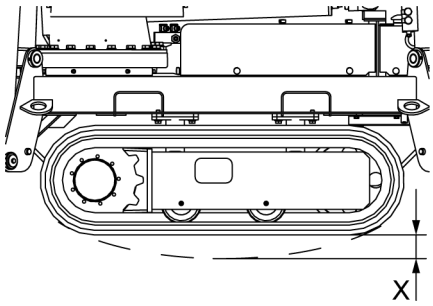

Fig. 102: Slack X

4. *Make sure that no lubricant escapes on the grease nipple (*Fig. 101*/1).*

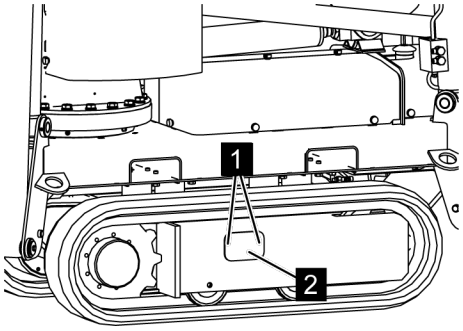

Fig. 103: Mounting the cover

5. *Mount the cover (*Fig. 103*/2) with the screws (*Fig. 103*/1).*

7.3.3 Lubricating the rotating drive

Personnel:	■ Qualified personnel
Protective equipment:	■ Protective clothing ■ Safety boots
Special tool:	■ Grease gun
Materials:	■ High-performance lubricant (Item no. 3917/0130)

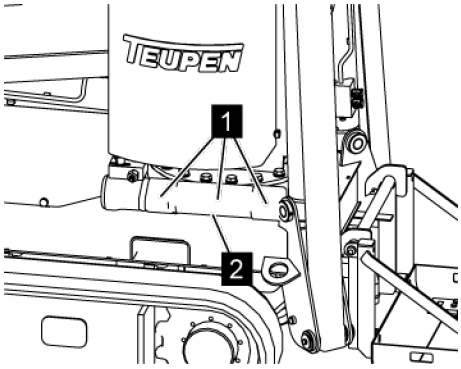

Fig. 104: Lubricating the rotating drive

1. *Put the machine in working position (↳ Chapter 6.5 'Putting the machine in work position' on page 72).*
2. *Use the grease gun on the grease nipples (*Fig. 104/*1) of the rotating drive to insert high-performance lubricant (Item no. 3917/0130).*
3. *Remove the excess lubricant and dispose of it properly.*
4. *Check the water drain hole (*Fig. 104/*2) on the underside of the rotary drive to see if it is soiled, clean if necessary.*

7.3.4 Checking the hydraulic oil level

Personnel:	■ Qualified personnel
Protective equipment:	■ Protective clothing ■ Safety boots
Materials:	■ Hydraulic oil (Item no. 3917/0066)

! **NOTICE!**

Property damage due to improper filling!

An incorrect oil level or incorrect hydraulic oil can cause failure of and damage to the hydraulic system.

– Check the oil level regularly.
– Only use prescribed oils (*Chapter 3.10 'Lubricants' on page 43*).
– Do not mix types of oil.

1. *Put the machine in transport position (Chapter 6.7 'Putting the machine in transport position' on page 79).*
2. *Make sure that the aerial access platform is aligned horizontally.*
3. *Pull the mains plug.*
4. *Unscrew the cover (*Fig. 105*/1) from the hydraulic oil tank.*

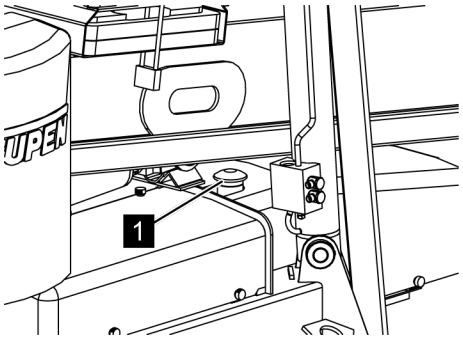

Fig. 105: Unscrewing the lid

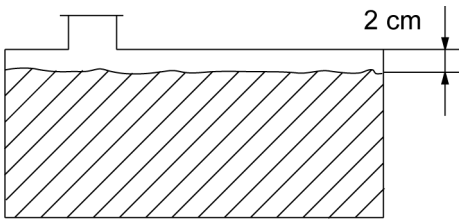

Fig. 106: Hydraulic oil level

5. *Check the oil level visually (if necessary, use a pocket flash light). The oil level must be approx. 2 cm below the top of the tank (*Fig. 106*).*
6. *If necessary, top up hydraulic oil (Item no. 3917/0066)(Chapter 3.10 'Lubricants' on page 43).*
7. *Screw the cover (*Fig. 105*/1) back on the hydraulic oil tank.*

7.3.5 Check the gearbox oil level of the crawler chassis

Personnel:	■ Qualified personnel
Protective equipment:	■ Protective clothing ■ Safety boots
Materials:	■ Gearbox oil (Item no. 3917/0130)

NOTICE!

Property damage due to improper filling!

An incorrect oil level or incorrect gearbox oil can cause failure of and damage to the gearbox.

– Check the oil level regularly.
– Only use prescribed oils (*Chapter 3.10 'Lubricants' on page 43*).

The chain drives each have a separate gearbox. The following instructions apply for one gearbox.

1. *Put the machine in transport position (Chapter 6.7 'Putting the machine in transport position' on page 79).*
2. *Align the aerial access platform so that the lower edge of the screw connection (*Fig. 107/*1) is on the middle axis (*Fig. 107/*2) of the gearbox unit (*Fig. 107/*3).*
3. *Make sure that the aerial access platform is aligned horizontally.*
4. *Pull the mains plug.*

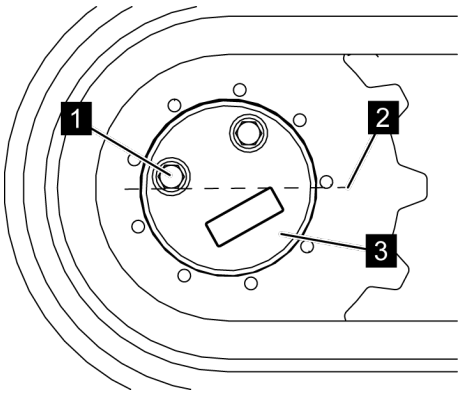

Fig. 107: Aligning the aerial access platform

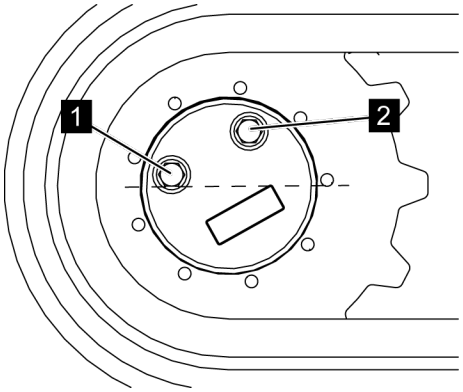

Fig. 108: Unscrewing the screw connections

5. *Unscrew the screw connections (*Fig. 108*/1 and 2).*

> *If necessary, catch escaping gearbox oil and dispose of it properly.*

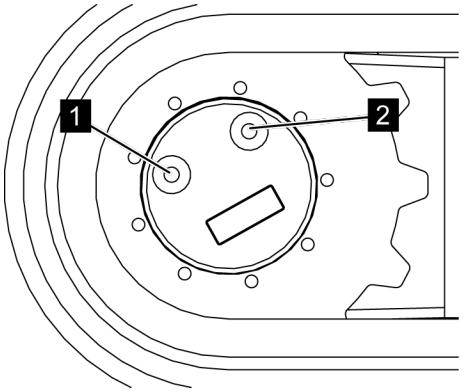

Fig. 109: Checking the oil level

6. *Check the oil level visually. The gearbox must be filled with oil up to the lower edge of the threaded hole (*Fig. 109*/1).*

7. *If necessary, top up gearbox oil (Item no. 3917/0122)(↳ Chapter 3.10 'Lubricants' on page 43). To do this, tip oil slowly through the hole (*Fig. 109*/2) until it reaches the lower edge of the threaded hole (*Fig. 109*/1).*

8. *Make sure that the seals and copper washers of the screw connections are present and in order.*

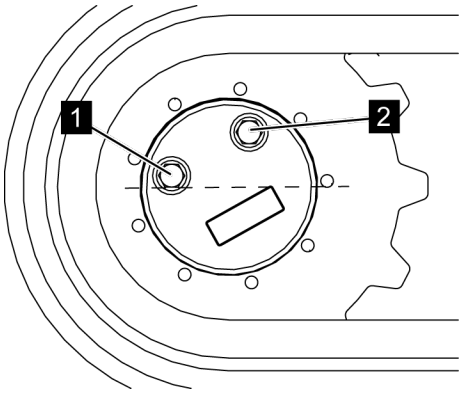

Fig. 110: Tightening the screw connections

9. *Re-tighten the screw connections (*Fig. 110*/1 and 2) with the seals or copper washers.*

7.3.6 Replacing the filter insert

Personnel:	■ Qualified personnel
Protective equipment:	■ Protective clothing ■ Safety boots
Materials:	■ Filter insert (Item no. 3162/0019)

1. *Put the machine in transport position (↳ Chapter 6.7 'Putting the machine in transport position' on page 79).*
2. *Pull the mains plug.*
3. *Unscrew all knurled thumb screws (*Fig. 111/*2) of the cover (*Fig. 111/*1) and remove the cover.*

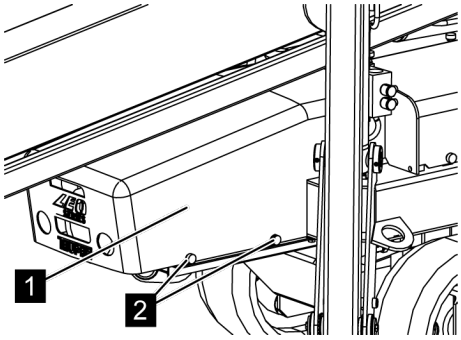

Fig. 111: Loosen the cover

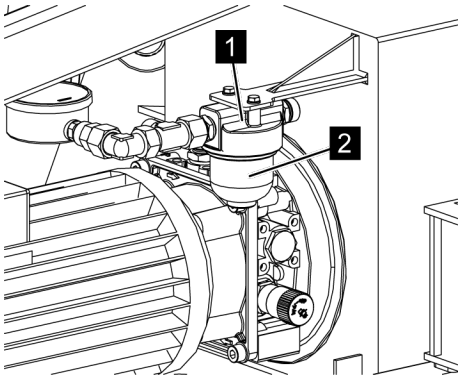

Fig. 112: Unscrewing the filter bowl

4. *Place a suitable container for hydraulic oil under the high-pressure filter (*Fig. 112/*1).*
5. *Carefully unscrew the filter bowl (*Fig. 112/*2).*
6. *Catch escaping hydraulic oil and dispose of it properly.*

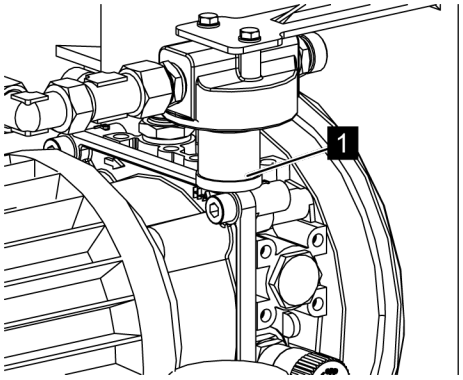

Fig. 113: Filter insert

7. *Remove the filter insert (*Fig. 113*/1) and insert a new filter insert.*

> *The filter insert (Item no. 3162/0019) can be ordered from the manufacturer. Please see page 2 for the contact data.*

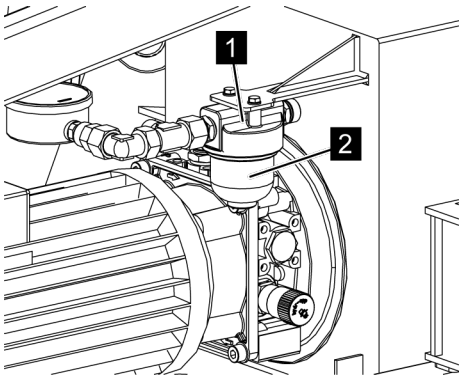

Fig. 114: High-pressure filter

8. *Screw the filter bowl (*Fig. 114*/2) back into the high-pressure filter (*Fig. 114*/1).*

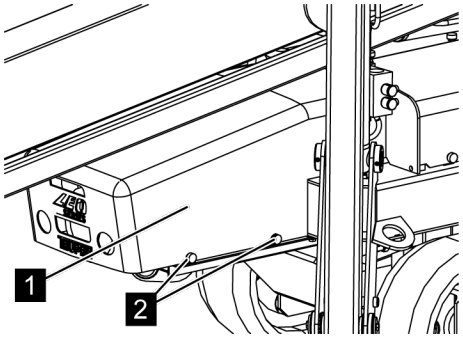

Fig. 115: Fastening the cover

9. *Replace the cover (*Fig. 115*/1) and screw on with the knurled thumb screws (*Fig. 115*/2).*

10. *Check the hydraulic oil level (↳ Chapter 7.3.4 'Checking the hydraulic oil level' on page 114).*

7.3.7 Lubrication plan

> *When handling lubricants, always heed the manufacturer's safety data sheet. With specification of the item number, the lubricants can be ordered from the manufacturer. Please see page 2 for the contact data.*

Maintenance

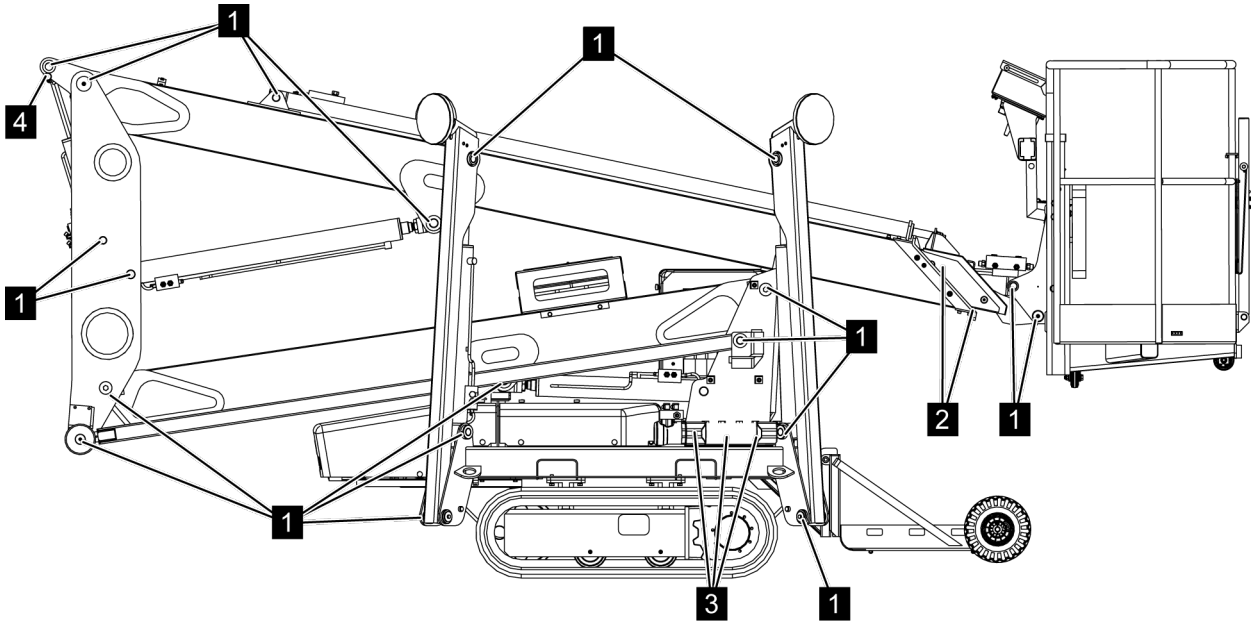

Fig. 116: Lubrication plan (similar to illustration)

No.	Designation	Lubricant	TEUPEN item number	Interval
1	Bolts	Lubricant spray	3917/0005	Weekly
2	Transport guides slide bearing	White paste spray	3917/0037	monthly
3	Rotating drive (3 grease nipples)	Grease	3917/0130	Weekly
4	Transducer cylinder (grease nipple)	Grease	3917/0095	Weekly

7.3.8 Rotating assembly tightening torques

WARNING!

Danger due to incorrect tightening torques!

If screws are tightened with the incorrect tightening torque, components can come loose and cause personal injury and property damage.

- Never exceed the maximum allowable tightening torque.
- Check the tightening torques regularly.
- Always heed the relevant guidelines and design criteria for screw connections.

The table shows the required tightening torques for achieving the most reliable initial tension for the screws of the rotating assembly.

Screw size	Screw quality	Tightening torque
M 12	10.9	110 Nm
M16	10.9	270 Nm

8 Faults

The following section describes possible causes of faults and the work to remedy them.

In case of faults that occur more than once, abbreviate the maintenance intervals according to the actual utilisation.

In case of faults that cannot be remedied using the following instructions, contact the manufacturer, see contact data on page 2.

8.1 Safety instructions for fault repair

Securing to prevent restart

WARNING!

Danger to life from an unauthorised restart!

In the event of an unauthorised restart of the power supply while tracking down and rectifying a fault, there is a danger of serious injuries or death for persons in the danger zone.

– Switch off all power supplies before starting work and make sure they cannot be switched on again.

Improperly-performed work for fault repair

WARNING!

Danger of injury due to improper fault repair!

Improperly-performed work for fault repair can cause severe injuries and significant property damage.

- Before starting work, ensure that there is sufficient assembly space.
- Make sure the assembly space is orderly and clean! Loosely-stacked components and tools or those left lying around are a source of accidents.
- Do not loosen connections sealed with yellow signal paint.
- If components have been removed, make sure they are assembled correctly, re-fit all fastening elements and adhere to screw tightening torques.
- Before recommissioning, heed the following points:
  - Make sure that all fault repair work is performed and completed according to the details and instructions in these instructions.
  - Make sure that there are no people in the danger zone.
  - Make sure that all covers and safety equipment are installed and functioning properly.

Hot surfaces

WARNING!

Danger of injury due to hot surfaces!

Surfaces of engine components can get heated up considerably during operation. Skin contact with hot surfaces causes severe burns to the skin.

- Avoid contact with engine components such as exhaust components, silencers, coolers, radiators, pipes and engine blocks.
- Check before all work on engine components, as to whether these are hot. If necessary, allow them to cool.

Faults

Hot operating materials

WARNING!
Danger of injury due to hot materials!
Operating materials (coolant liquids or motor oils) can attain high temperatures in use. Skin contact with hot materials causes severe burns to the skin.

– Avoid contact with hot operating materials.
– Check before all work with operating materials, as to whether these are hot. If necessary, allow them to cool.

Behaviour in the event of faults

The following applies in principle:

1. *Immediately initiate an emergency stop in the event of faults posing an immediate danger to people or property.*
2. *Ascertain the cause of the fault.*
3. *If fault rectification requires work in the danger zone, shut down the machine and secure to prevent restarting.*

   Immediately notify those responsible at the place of use about the fault.
4. *Depending on the nature of the fault, have it rectified by authorised specialised personnel or rectify it yourself.*

The fault table below provides information about who is authorised to rectify the fault.

8.2 Fault table

If the fault is not included in the table below or if it cannot be repaired with the measures described, make contact with the manufacturer (see page 2 for the contact data).

Fault description	Cause	Remedy	Personnel
No function with voltage supply via construction side feed or generator	Safety equipment has been triggered (fuse, FI circuit breaker)	Check safety equipment and switch on or replace if necessary (*Chapter 8.5.1 'Changing fuses' on page 133* or *Chapter 8.5.2 'Switching the circuit breaker on/off' on page 135*)	Trained people
	Extension cable faulty	Replace extension cable (*'Cable lengths' on page 42*)	Trained people
	Incorrect cable cross-section or incorrect cable length	Adhere to permissible cable length and cable cross-section (*'Cable lengths' on page 42*)	Trained people
Crawler chassis does not move	Switch position on the control panel incorrect	Set the function selection switch to "Drive" (*Chapter 6.4 'Moving the machine' on page 68*)	Trained people
	Safety equipment has been triggered (fuse, FI circuit breaker)	Check safety equipment and switch on or replace if necessary (*Chapter 8.5.1 'Changing fuses' on page 133* or *Chapter 8.5.2 'Switching the circuit breaker on/off' on page 135*)	Trained people
Bracing not possible	Switch position on the control panel incorrect	Move function selection switch to "Outriggers" (*Chapter 6.5 'Putting the machine in work position' on page 72*)	Trained people
	Machine not in transport position	Put the machine in transport position (*Chapter 6.7 'Putting the machine in transport position' on page 79*)	Trained people
	Safety equipment has been triggered (fuse, FI circuit breaker)	Check safety equipment and switch on or replace if necessary (*Chapter 8.5.1 'Changing fuses' on page 133* or *Chapter 8.5.2 'Switching the circuit breaker on/off' on page 135*)	Trained people
No platform function possible	Position of function selection switch on the control panel incorrect	Toggle function selection switch to "Platform" (*Chapter 6.6 'Operating the machine' on page 77*)	Trained people

Faults

Fault description	Cause	Remedy	Personnel
	Position of pre-selection lever on the control panel incorrect	Move pre-selection lever to "Platform" (↳ *Chapter 6.6 'Operating the machine' on page 77*)	Trained people
	Emergency Stop button activated	Unlock Emergency Stop button (↳ *'Emergency Stop button' on page 29*)	Trained people
	Bracing not correct	Check bracing (↳ *Chapter 6.5 'Putting the machine in work position' on page 72*)	Trained people
	No or insufficient voltage supply	Check voltage supply	Qualified Electrician
	Safety equipment has been triggered (fuse, FI circuit breaker)	Check safety equipment and switch on or replace if necessary (↳ *Chapter 8.5.1 'Changing fuses' on page 133* or ↳ *Chapter 8.5.2 'Switching the circuit breaker on/off' on page 135*)	Trained people
Extension of upper boom not possible	Upper boom is in the transport lock	Lift upper boom out of the transport lock (↳ *Chapter 6.6 'Operating the machine' on page 77*)	Trained people
	Safety equipment has been triggered (fuse, FI circuit breaker)	Check safety equipment and switch on or replace if necessary (↳ *Chapter 8.5.1 'Changing fuses' on page 133* or ↳ *Chapter 8.5.2 'Switching the circuit breaker on/off' on page 135*)	Trained people
Swivelling not possible	Upper and lower boom still in the transport lock	Lift lower boom out of the transport lock (↳ *Chapter 6.6 'Operating the machine' on page 77*)	Trained people
	Safety equipment has been triggered (fuse, FI circuit breaker)	Check safety equipment and switch on or replace if necessary (↳ *Chapter 8.5.1 'Changing fuses' on page 133* or ↳ *Chapter 8.5.2 'Switching the circuit breaker on/off' on page 135*)	Trained people
Green light on the control panel is blinking	Bracing not correct	Check bracing (↳ *Chapter 6.5 'Putting the machine in work position' on page 72*)	Trained people
Red light on the control panel is always lit	Operating lever moved during the start process	Activate Emergency Stop and re-start control (unlock Emergency Stop button)	Trained people

Fault description	Cause	Remedy	Personnel
	System error	Call service	Trained people
Red light on the control panel is blinking	Basket level is tilted more than ± 5°	Align basket using valve control (emergency operation)(*Chapter 6.11 'Emergency operation' on page 90*)	Trained people
Red and green lights never light up	Safety equipment has been triggered (fuse, FI circuit breaker)	Check safety equipment and switch on or replace if necessary (*Chapter 8.5.1 'Changing fuses' on page 133* or *Chapter 8.5.2 'Switching the circuit breaker on/off' on page 135*)	Trained people
Motor pump runs and stalls	Hydraulic hose kinked	Checking the hydraulic hoses	Qualified personnel
	Pressure filter soiled	Replace filter insert (*Chapter 7.3.6 'Replacing the filter insert' on page 117*)	Qualified personnel
Work platform lowers by itself	Hydraulic system defective	Take machine out of service immediately and call service	Trained people
Loud motor pump noise and movements get slower and then stop	Too little hydraulic oil in the tank	Check hydraulic oil level and top up if necessary (*Chapter 7.3.4 'Checking the hydraulic oil level' on page 114*)	Trained people
	Hydraulic system is leaking	Call service	Trained people
Outlet in the working basket has no voltage	Voltage supply interrupted	Check voltage supply	Qualified Electrician
	Plug not in the outlet	Plug in plug (*Chapter 6.2 'Switching the machine on/off' on page 63*)	Trained people
	Safety equipment has triggered	Check the fuses (*Chapter 8.5.1 'Changing fuses' on page 133* or *Chapter 8.5.2 'Switching the circuit breaker on/off' on page 135*)	Trained people
Great wear on the crawler track	Drive ring severely worn	Call service	Trained people
Steel wires of the crawler tracks broken	Excessive tension on the chain bands due to stones caught, abrupt swerving	Call service	Trained people

Faults

Fault description	Cause	Remedy	Personnel
	on rough floor, defective spring set, frozen material between the rollers		

8.3 Error code list

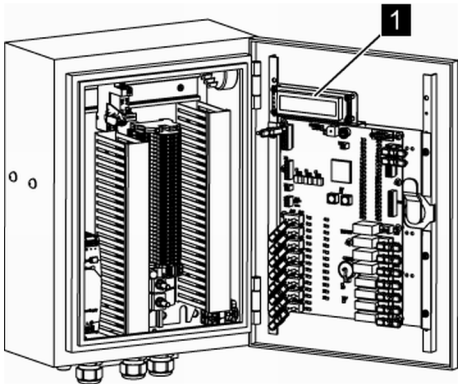

Fig. 117: Display

Faults and error codes are displayed on the display (Fig. 117/1) in the control box.

On some messages CM or CS can appear additionally. This relates to the respective card that has triggered the fault message.

- *CM – **C**AN **M**ASTER (master carte) (Display at the control box)*
- *CS – **C**AN **S**LAVE (slave carte) (card on the interior side of the control box door)*

No.	Description
1	Software error / hardware error.
2	Software error / hardware error.
3	Software error / hardware error.
4	Hardware error microprocessor.
5	Check inputs floor pressure and outrigger 1 lock.
6	Check inputs floor pressure and outrigger 2 lock.
7	Check inputs floor pressure and outrigger 3 lock.
8	Check inputs floor pressure and outrigger 4 lock.
9	Check inputs for the position switch "wide braced" outrigger 1.
10	Check inputs for the position switch "wide braced" outrigger 2.
11	Check inputs for the position switch "wide braced" outrigger 3.
12	Check inputs for the position switch "wide braced" outrigger 4.
13	Check safety relay 1 monitoring contact.

No.	Description
14	Check safety relay 2 monitoring contact.
15	Check safety relay 3 monitoring contact.
16	Check safety relay 4 monitoring contact.
17	Check the inputs for the position switch "Telescopic arm fit".
18	If control on and outriggers is not locked, no position switch may be active for outrigger height.
19	Joystick 1 of cable remote control moved at start or is defective.
20	Joystick 2 of cable remote control moved at start or is defective.
21	The joysticks on control desk moved at start or are defective (release contact).
22	The joysticks on the cable remote control moved at start or are defective (release contact).
23	Joystick 1 on control desk moved at start or is defective.
24	Joystick 2 on control desk moved at start or is defective.
25	Joystick 3 on control desk moved at start or is defective.
26	Joystick 4 on control desk moved at start or is defective.
27	Button 1 of bottom control pressed or defective.
28	Button 2 of bottom control pressed or defective.
29	Button 3 of bottom control pressed or defective.
30	Button 4 of bottom control pressed or defective.
31	Toggle switch to activate basket swivel on bottom control pressed or defective.
32	Toggle switch to activate movements on bottom control is pressed or defective.
33	Toggle switch to activate auto bracing on bottom control pressed or defective.
34	One toggle switch to set basket level was pressed or is defective.
35	When machine switched on, voltage on output side or output driver defective.
36	Voltage of back battery is more than 4V, replace battery or hardware error on control.
37	Supply voltage has dropped below 17 V.
38	Supply voltage has exceeded 32 V.
39	The measured angle may not exceed a certain value while the telescope is placed. It is possible that the position switch of the system is stuck.
40	Check relay release chassis.
41	Machine swivelled too far with narrow bracing or resolver transducer is defective.

Faults

No.	Description
42	Machine swivelled too far with one-side wide bracing or resolver transducer defect
43	Machine swivelled too far with wide bracing or resolver transducer defective.
44	Maximum swivel range exceeded or rotary transducer is defective.
45	Compare error of swivel angle. Check resolver transducer or calibrate angle sensors.
46	Check the position of the angle sensors. Is required reset.
47	Telescopic arm too wide or resolver transducer defective.
48	Check pressure sensors.
49	Check pressure sensor for reliable values.
50	The pressure measured for this situation is too low. The telescopic arm is braced or the pressure sensor is defective.
51	Position switch for telescoping in telescopic arm defective.
52	Software error / hardware error.
53	Software error / hardware error.
54	Hardware error SPI real time clock.
55	Machine was not switched off for several days and must be restarted.
56	Different input information of the safety functions between the master and slave.
57	Different input information of the safety functions between the master and slave.
58	Different input information of the safety functions between the master and slave.
59	Different input information of the safety functions between the master and slave.
60	Check safety relay 1 monitoring contact
61	Check safety relay 2 monitoring contact
62	Check safety relay 3 monitoring contact
63	Check safety relay 4 monitoring contact
64	Telescopic arm too wide or resolver transducer defective.
65	Load curve saved wrong. Check load curves and save again.
66	Load curve deviation too far from base curve. Check load curves and save again.
67	Load curve values wrong. Check load curves and save again.
68	Angle values in load curve do not match specifications. Check load curves and save again.
69	The amount of outriggers does not match the specification. Check load curves and save again.

No.	Description
70	Error in checking load curve. Check load curves and save again.
71	Error in calculating load limit. Check load curves and angle sensors of telescopic arm.
72	Max. current of basket scale exceeded, check basket scale.
73	Min. current of basket scale not reached, check basket scale.
74	Max. current of basket scale exceeded, check basket scale.
75	Basket scale delivers different values, check basket scale.
76	Software error
77	Calibrated values of outputs are wrong, check values or load factory settings.
78	Software error / hardware error.
79	Software error / hardware error.
80	Joystick values wrong. Check joysticks and their parametrization.
81	Joystick values of remote control wrong. Check remote control.
82	Calibrated values of joysticks wrong, check values or load factory settings.
83	Second control cannot be reached via internal CAN bus. Check CAN connection and second control.
84	Upon starting the controller the second controller was already started. Check voltage supply and CAN bus.
85	Check internal CAN bus.
86	Check internal CAN bus.
87	Check internal CAN bus.
88	Software error
89	Check internal CAN bus.
90	Check external CANopen bus.
91	Check external CANopen bus.
92	Check external CANopen bus.
93	Check external CANopen bus.
94	Radio receiver on Emergency Stop circuit, error does not occur.
95	Check radio transmitter and radio receiver or check external CANopen bus.
96	The offset value exceeds the permissible range. Check resolver transducer and calibrate again.
97	Error when reading in angle sensors on telescopic arm. Check resolver transducer and supply.

Faults

No.	Description
98	Error when reading in resolver transducer. Check resolver transducer and supply.
99	Error when reading in swivel angle sensors. Check resolver transducer and supply.
100	Compare values of resolver transducer wrong, check values and calibrate resolver transducer again.
101	Software error / hardware error.
102	EEPROM memory content faulty. Execute calibrate functions.
103	Software error / hardware error.
104	Software error / hardware error.
105	Software error / hardware error.
106	EEPROM memory content faulty. Re-start machine or delete RAM lists.
107	Software error / hardware error.
108	Software error / hardware error.
109	Software error / hardware error.
110	Software error / hardware error.
111	Software error / hardware error.
112	Software error / hardware error.
113	Software error / hardware error.
114	Software error / hardware error.
115	Software error / hardware error.
116	Software error / hardware error.
117	Software error / hardware error.
118	The bracing angle is in invalid range or tilt sensor is defective.
119	Error was detected by other control. Read-out error memory on 2nd control.
120	Software error / hardware error.
121	The software version has been changed. Adjust the software version in EEPROM.
122	Check inputs for the position switch "Centre position basket rotating"
123	Check inputs for the position switch "Lowering basket position OK"
124	Check inputs for the position switch "Low working height"
125	The release button USA was actuated during the start of the machine or is defective.

8.4 Notes about the rubber track

Damage

During operation, the rubber track is subject to normal wear. Some kinds of damage are explained in the table below.

Damage	Possible cause	Note
Cracks in the profile foot	■ Hard use in the field. ■ Crossing sharp-edged or high hurdles. ■ With old, little-used tracks, possible material fatigue as a result of bending load.	No compromise of operation.
Cracks on the outside flanks	■ Hard use in the field. ■ Crossing sharp-edged or high hurdles.	No compromise of operation.
Cracks on the inside by the metal core	■ Various causes.	No compromise of operation.
Wear of the metal core	■ Normal wear due to cams of the drive wheel. ■ Increased wear with use on very sandy ground.	Heed chain tension. The metal core can become bent by great wear. This can cause breaks with progressive wear. Change rubber tracks early.
Wear of the profile	■ Normal occurrence. ■ Depending on the area of application earlier or later.	Depending on the area of application, the rubber tracks must be replaced appropriately early. Essentially, however, can be moved until there is no more profile.

Remedies

- Brief daily visual inspection.
- Careful moving in swampy ground, especially when slowing down.
- In case of palpable resistance, first determine the cause. Do not move forward with force.
- Use care when driving on impassable and hilly land, especially when slowing down.
- Execute control manoeuvres with appropriate caution.

- Clean chain drive after completing work.
- If there is a danger of frost, clean the drive and track inside by driving on clean ground. Then park the machine on wooden boards.

8.5 Work for fault repair

8.5.1 Changing fuses

Personnel:
- Qualified personnel

Protective equipment:
- Protective clothing
- Safety boots

DANGER!

Danger to life due to electric current!

In case of contact with live components, there is danger to life. Switched-on electric components can make uncontrolled movements and cause extremely severe injuries.

– Before starting work, switch off the voltage supply and secure against switching on again.
– When changing fuses, adhere to the correct amperage.

1. *Pull the mains plug.*

2. *Unscrew all knurled thumb screws (*Fig. 118*/1) of the cover (*Fig. 118*/2) and remove the cover.*

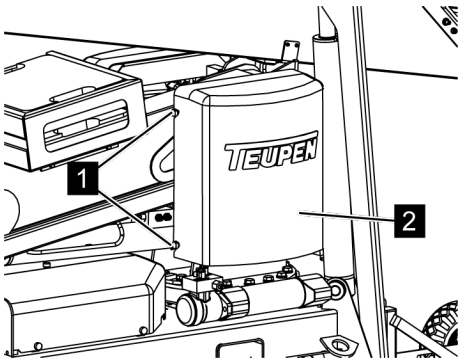

Fig. 118: Loosen the cover

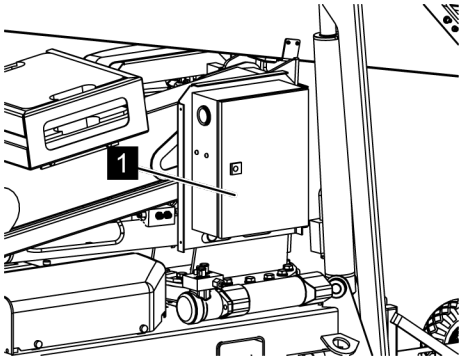

Fig. 119: Opening the control box door

3. *Open control box door (*Fig. 119*/1) with the included double bit key (* *Chapter 4.7.1 'Keys' on page 53**).*

The fuses are on the fuzzy control card (*Chapter 8.6.1 'Fuzzy control card' on page 136**). It is attached to the control box door from the inside.*

4. *Replace defective fuse with a new fuse of equal amperage.*

5. *Close control box door (*Fig. 119*/1) and lock with the double bit key.*

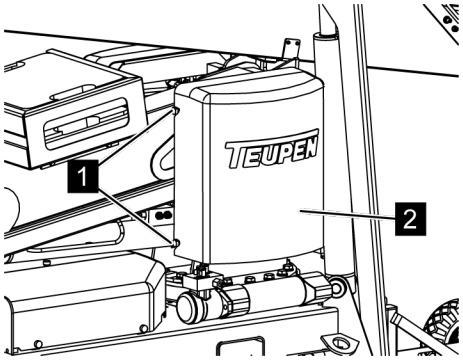

Fig. 120: Fastening the cover

6. *Replace the cover (*Fig. 120*/2) and screw on with the knurled thumb screws (*Fig. 120*/1).*

8.5.2 Switching the circuit breaker on/off

Personnel: ■ Qualified personnel

Protective equipment: ■ Protective clothing
■ Safety boots

DANGER!
Danger to life due to electric current!
In case of contact with live components, there is danger to life. Switched-on electric components can make uncontrolled movements and cause extremely severe injuries.

– Before starting work, switch off the voltage supply and secure against switching on again.
– When changing fuses, adhere to the correct amperage.

1. *Pull the mains plug.*

2. *Unscrew all knurled thumb screws (*Fig. 121*/2) of the cover (*Fig. 121*/1) and remove the cover.*

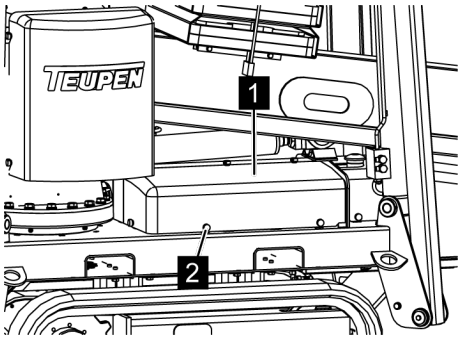

Fig. 121: Loosen the cover

3. *Open cover (*Fig. 122*/1) of the FI box (*Fig. 122*/2).*

4. *Switch the FI circuit breaker or safety switch for outlet on the working basket*
(↳ Chapter 8.5.2 'Switching the circuit breaker on/off' on page 135) on or off.

5. *Close cover (*Fig. 122*/1) of the FI box (*Fig. 122*/2).*

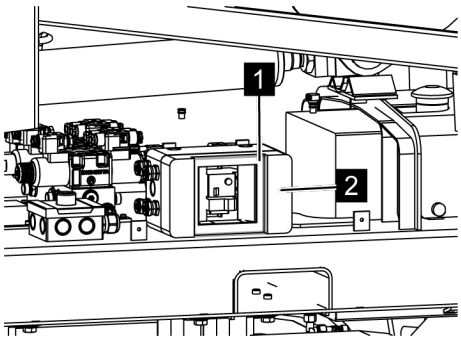

Fig. 122: Opening the cover

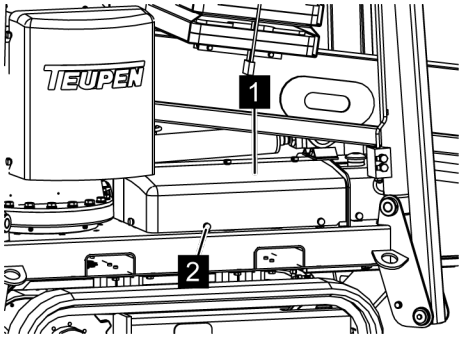

Fig. 123: Replacing cover

6. *Replace the cover (*Fig. 123*/1) and screw on with the knurled thumb screws (*Fig. 123*/2).*

8.6 Fuses

8.6.1 Fuzzy control card

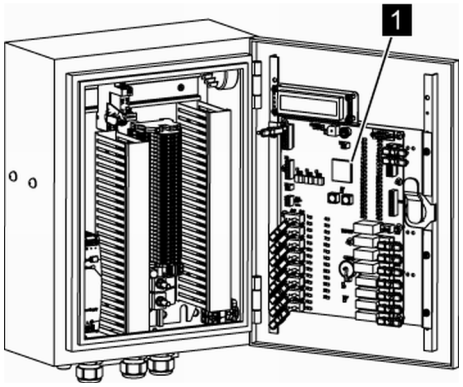

Fig. 124: Fuzzy IV control card

The Fuzzy IV control card (Fig. 124/1) is located in the control box.

For the precise assignment, consult the circuit diagram (*Appendix B 'Circuit diagram' on page 201*).

8.6.2 Working basket fuse and FI circuit breaker

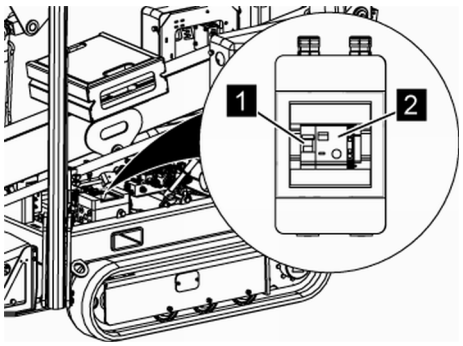

Fig. 125: Circuit breaker

1 Safety switch on plug in working basket
2 FI circuit breaker

9 Disposal

After the service life of the machine has ended, the machine must be disposed of in environmentally-friendly fashion.

9.1 Safety instructions for disposal

Electrical system

DANGER!

Danger to life from electric power!

Contact with live parts may prove fatal. When switched on, electric components may be subject to uncontrolled movements and may cause grave injury.

– Before starting the dismantling, switch off the electric power supply and disconnect completely.

9.2 Disposal

If no return or disposal agreement has been made, send the dismantled components for recycling.

- Scrap metals.
- Send plastic elements for recycling.
- Sort and dispose of other components in accordance with their material composition.

Disposal

NOTICE!

Danger to the environment due to incorrect disposal!

Incorrect disposal may pose risks to the environment.

– Electrical scrap, electronic components, lubricants and other auxiliary materials must be disposed of by authorised specialist companies.
– If in doubt, obtain information about disposal in accordance with the environmental regulations from the local municipal authorities or specialised waste disposal companies.

10 Index

Index

Appendix

Appendix

Table of contents of the appendix

Appendix

A Combustion engine

Combustion engine

A.1 Gasoline engine Robin-Subaru EX 21

Combustion engine

FOREWORD

Thank you very much for purchasing a **ROBIN ENGINE**.

Your **ROBIN ENGINE** can supply the power to operate various sorts of machines and equipment.

Please take a moment to familiarize yourself with the proper operation and maintenance procedures in order to maximize the safe and efficient use of this product.

Keep this owner's manual at hand, so that you can refer to it at any time.

Due to constant efforts to improve our products, certain procedures and specifications are subject to change without notice.

When ordering spare parts, always give us the MODEL, PRODUCTION NUMBER and SERIAL NUMBER of your engine.

Please fill in the following blanks after checking the production number on your engine. (Location of label is different depending on the engine specification.)

EN

PROD No.	SER No.

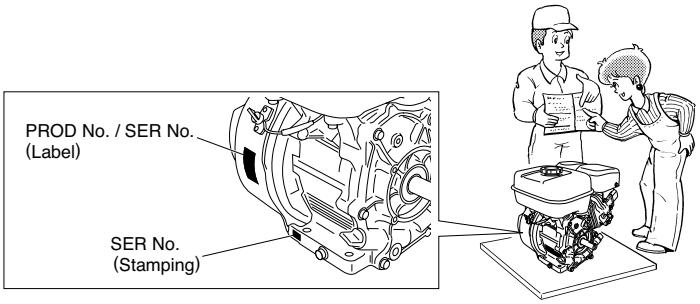

NOTICE

The engines which have emission label are allowed to be exported to USA. The emission label placed on the engine indicates that the engine is complied with EPA (Environmental Protection Agency) and CARB (California Air Resources Board) emission regulations in USA. Exporting any engine to USA which does not have the emission label is a violation of EPA/CARB emission law subject to civil penalty.

CONTENTS

NOTE **Please refer to the illustrations on the back page of the front cover or back cover for Fig. 1 to 8 indicated in the sentence.**

1. SAFETY PRECAUTIONS

Please make sure you review each precaution carefully.
Pay special attention to statement preceded by the following words.

⚠ WARNING **"WARNING" indicates a strong possibility of severe personal injury or loss of life if instructions are not followed.**

⚠ CAUTION **"CAUTION" indicates a possibility of personal injury or equipment damage if instructions are not followed.**

EN

⚠ WARNING : EXHAUST PRECAUTIONS

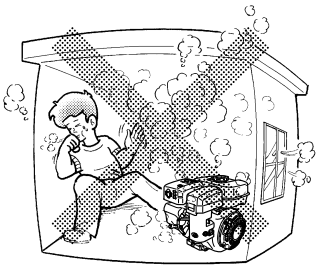

- Never inhale exhaust gasses.
  They contain carbon monoxide, a colorless, odorless and extremely dangerous gas which can cause unconsciousness or death.
- Never operate the engine indoors or in a poorly ventilated area, such as tunnel, cave, etc.
- Exercise extreme care when operating the engine near people or animals.
- Keep the exhaust pipe free of foreign objects.

⚠ WARNING : REFUELING PRECAUTIONS

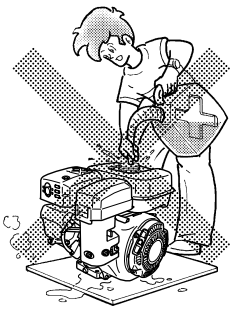

- **Gasoline is extremely flammable and its vapors can explode if ignited.**
- Do not refuel indoors or in a poorly ventilated area.
- Be sure to stop the engine prior to refueling.
- Do not remove fuel tank cap nor fill fuel tank while engine is hot or running.
  Allow engine to cool at least 2 minutes before refueling.
- Do not overfill the fuel tank.
- If fuel is spilt, wipe it away carefully and wait until the fuel has dried before starting the engine.
- After refueling, make sure that the fuel cap is secured to prevent spillage.

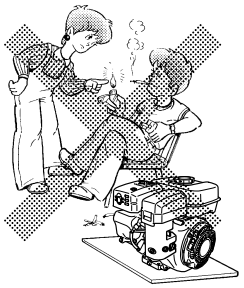

⚠ WARNING : FIRE PREVENTION

- Do not operate the engine while smoking or near an open flame.
- Do not use around dry brush, twigs, cloth rags, or other flammable materials.
- Keep cooling air intake (recoil starter area) and muffler side of the engine at least 1 meter (3 feet) away from buildings, obstructions and other burnable objects.
- Keep the engine away from flammables and other hazardous materials (trash, rags, lubricants, explosives).

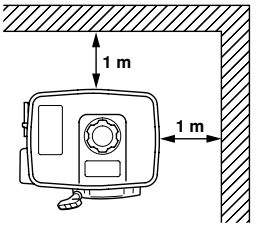

⚠ WARNING : OTHER SAFETY PRECAUTIONS

- **Place the protective covers over the rotating parts.**
  If rotating parts such as the drive shaft, pulley, belt, etc. are left exposed, they are potentially hazardous. To prevent injury, equip them with protective covers or shrouds.
- **Be careful of hot parts.**
  The muffler and other engine parts become very hot while the engine is running or just after it has stopped. Operate the engine in a safe area and keep children away from the running engine.

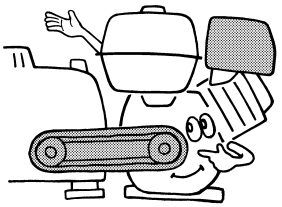

- Do not touch the spark plug and ignition cable when starting and operating the engine.
- Never make adjustments on the machinery while it is connected to the engine, without first removing the ignition cable from the spark plug. Turning the crankshaft by hand during adjusting or cleaning might start the engine, and cause serious injury to the operator.
- Operate the engine on a stable, level surface.
  If the engine is tilted, fuel spillage may result.

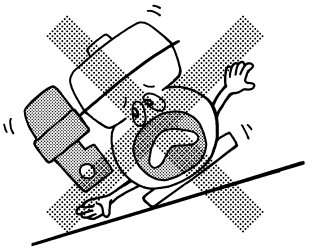

> **NOTE**
> Operating the engine at a steep incline may cause seizure due to improper lubrication even with a maximum oil level.

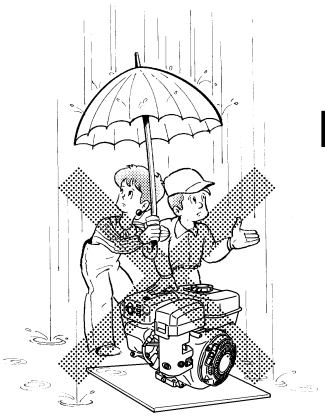

EN

- Do not transport the engine with fuel in tank or with fuel strainer cock open.
- Do not move the engine while in operation when it has been removed from the equipment.
- Keep the unit dry (do not operate it in rainy conditions).

⚠ WARNING : WHEN CHARGING THE BATTERY

- Battery electrolyte contains sulphuric acid. Protect your eyes, skin and clothing. In case of contact, flush thoroughly with water and get prompt medical attention, especially if your eyes are affected.
- Batteries generate hydrogen gas, which can be highly explosive. Do not smoke or allow flames or sparks near a battery, especially during charging.
- Charge the battery in a fully ventilated location.
- Be sure to confirm Battery polarity.

⚠ CAUTION : PRE-OPERATION CHECKS

- Carefully check fuel hoses and joints for looseness and fuel leakage. Leaked fuel creates a potentially dangerous situation.
- Check bolts and nuts for looseness. A loose bolt or nut may cause serious engine trouble.
- Check the engine oil and refill if necessary.
- Check the fuel level and refill if necessary. Take care not to overfill the tank.
- Keep cylinder fins and recoil starter free of dirt, grass and other debris.
- Wear snug fitting working clothes when operating the engine.
  Loose aprons, towels, belt, etc., may be caught in the engine or drive train, causing a dangerous situation.

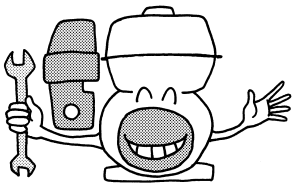

SYMBOLS

SY2241

	Read manual.		*Shutt off fuel valve when the engine is not in use.*
	Stay clear of the hot surface.		*Check for leakage from hose and fittings.*
	Exhaust gas is poisonous. Do not operate in an unventilated room or enclosed area.		*Fire, open flame and smoking prohibited.*
	Stop the engine before refueling.		*HOT, avoid touching the hot area.*

	On (Run)		*Engine start (Electric start)*		*Fuel (gasoline)*
	Off (Stop)		*Engine stop*		*Fuel shut-off*
	Engine oil		*Fast*		*Fuel system failure / malfunction*
	Add oil		*Slow*		*Choke*
	Battery		*Plus ; positive polarity*		*Minus ; negative polarity*

EN

2. COMPONENTS

(See Fig. 1)

NOTE **Please refer to the illustrations on the back page of the front cover or back cover for Fig. 1 to 8 indicated in the sentence.**

❶ SPARK PLUG
❷ EXHAUST OUTLET
❸ MUFFLER COVER
❹ AIR CLEANER
❺ FUEL TANK
❻ FUEL TANK CAP (FUEL FILLER)
❼ SPEED CONTROL LEVER
❽ RECOIL STARTER
❾ STARTER HANDLE
❿ CHOKE LEVER
⓫ FUEL COCK
⓬ FUEL CUP
⓭ CARBURETOR
⓮ P.T.O. SHAFT
⓯ OIL GAUGE (OIL FILLER)
⓰ OIL DRAIN PLUG
⓱ ENGINE SERIAL NO. (STAMPING)
⓲ ENGINE NAME LABEL (SPEC. No.)
⓳ STOP SWITCH
⓴ OIL SENSOR UNIT

3. PRE-OPERATION CHECKS

NOTE
Engine shipped from our factory is without oil.
Before starting engine, fill with oil. Do not over-fill.

1. CHECK ENGINE OIL (See Fig. 2)

Before checking or refilling engine oil, be sure the engine is located on stable, level surface and stopped.

- Do not screw the oil gauge into the oil filler neck to check oil level. If the oil level is low, refill to the upper level with the following recommended oil.
- Use 4-stroke automotive detergent oil of API service class SE or higher grade.
- Select the viscosity based on the air temperature at the time of operation as shown in the table. (See Fig.2-①)

Oil capacity (Upper level) :	(L)
EX13/17/21	0.6
EX27/30	1.0
EX35/40	1.2

Explanation of Fig.2-②

❶ Oil Gauge
❷ Upper Level
❸ Lower Level

- For the engine with Oil Bath type air cleaner, fill the engine oil upto the specified level of the oil bath (oil pan). (See Fig.2-③-❶)

Oil Capacity in the Oil Bath (oil pan) :
EX13/17/21 . . . . . About 55 mL

2. CHECK FUEL (See Fig. 3)

⚠ WARNING

Do not refuel while smoking, near an open flame or other such potential fire hazards. Otherwise fire accident may occur.

- Stop the engine and open the cap.
- Use unleaded automotive gasoline only.

Fuel tank capacity :	(L)		
EX13	2.7	EX17	3.6
EX21	3.6	EX27	6.1
EX35	7.0	EX40	7.0

- Close the fuel cock before filling the fuel tank.
- Do not fill above the top of the fuel filter screen (marked ❷), or the fuel may overflow when it heats up later and expands.
- When filling the fuel tank, always use the fuel filter screen.
- After refueling, tighten the fuel cap (rotate clockwise) until it makes a physical stop, there will be a relief in resistance just before the physical stop.
  This will form a vapor seal between the tank and fuel cap.
- Wipe off any spilled fuel before starting the engine.

4. ELECTRIC STARTER MODELS

EN

For electric starter operation, proper electric wiring arrangements are needed before normal engine operation.

1. BATTERY

- Use a battery rated 12V-24AH or larger.

⚠ WARNING

- **Charge the battery in a fully ventilated location.**
- **Batteries generate hydrogen gas, which can be highly explosive. Do not smoke or allow flames or sparks near a battery, especially during charging.**
- **Be sure to confirm Battery polarity. Connect positive (+) terminal first when mounting battery, and disconnect negative (−) terminal first when dismounting.**
- **Battery electrolyte contains sulphuric acid. Protect your eyes, skin and clothing. In case of contact, flush thoroughly with water and get prompt medical attention, especially if your eyes are affected.**

2. BATTERY CABLE

- Use a proper cable and ground wire to connect battery.
- For GROUND WIRE, use a flat braided wire of 20 sq. mm. or larger sectional area.

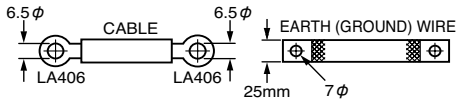

Cable length	Cable dia.	Wire gauge		
		AWG (BS) BWG	SAE	JIS
Less than 1.5m	7.3 mm	1	6	AV15
1.5 m to 2.5 m	8.4 mm	0	4	AV20
2.5 m to 4 m	10.8 mm	3/0	2	AV30

3. KEY SWITCH CABLE

If a remote key switch is used, select wires of proper gauge to connect it and magnetic switch of the engine.

Cable length	Cable dia.	Wire gauge		
		AWG (BS)	BWG	JIS
Less than 1.5 m	1.5 mm	14	16	AV1.25
1.5 m to 3 m	1.9 mm	12	14	AV2
3 m to 5 m	2.4 mm	10	13	AV3

EN

4. WIRING

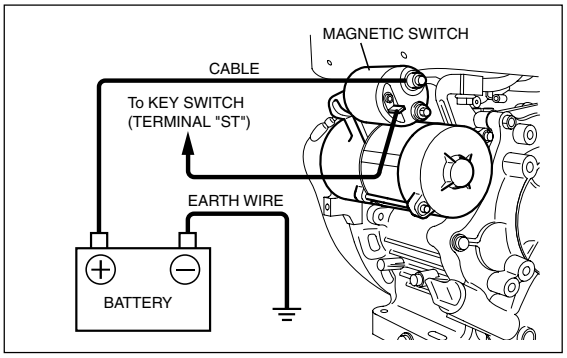

(1) Connect positive (+) terminal of the magnetic switch and positive (+) terminal of the battery with battery cable.

⚠ CAUTION

Make sure the polarity of battery terminals. Never connect the battery cable with the battery negative (-) terminal.
When connecting the battery cable with the battery negative (-) terminal, diode rectifier chips will be burned out or damaged in a moment.

(2) Ground negative terminal of the battery to the engine body or machine with ground wire.

(3) When installing the key switch on the machine, install with its drain hole at the bottom.

NOTE
Tighten bolts and nuts on terminals securely so that they will not be loosened by vibration.

5. WIRING DIAGRAM (RECOIL STARTER MODELS)

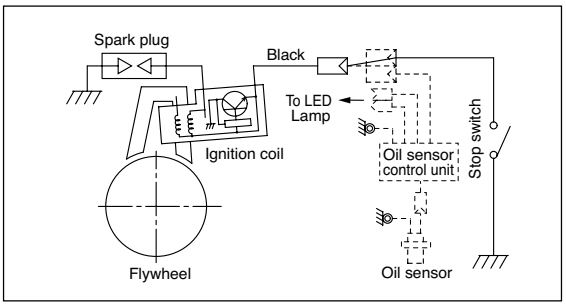

WIRING DIAGRAM (ELECTRIC STARTER MODELS)

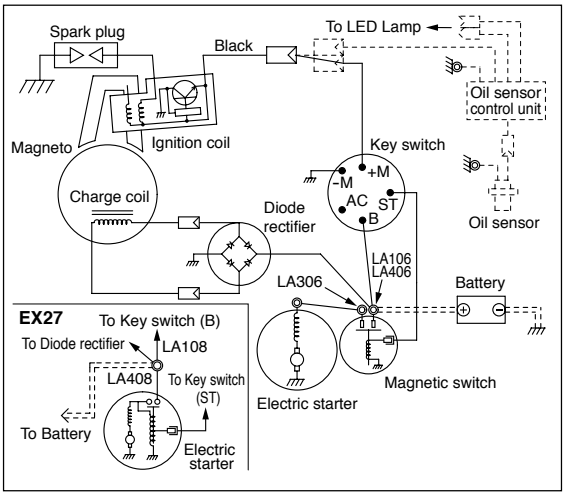

Optional hardware shown by dotted lines.

5. BELT PULLEY INSTALLATION ONTO KEYWAY-TYPE CRANKSHAFT

When installing the belt pulley and/or clutch onto keyway-type crankshaft (PTO shaft), proper and correct arrangements are needed. The following illustration shows the correct installation of the applicable component parts.

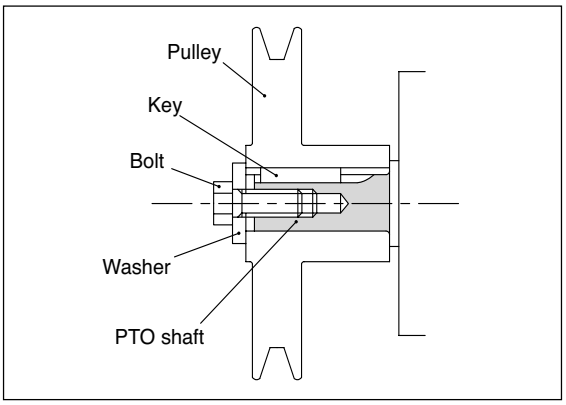

■ **Metric keyway-type crankshaft**

Washer; Use the washer (material; SS41P) with the thickness described below;

	EX13/17/21	EX27	EX35/40
Washer Thickness mm	4.5 or over		6.0 or over
ROBIN genuine part	020-00801-40, Washer	020-00800-20, Washer	020-01002-20, Washer
Thickness; mm	4.5	4.5	6.0
OD; mm	28	35	40
ID; mm	8.5	8.5	10.5
Material;	SS41P	SS41P	SS41P

Bolt; Select the proper bolt and tighten it to the specified tightening torque, as mentioned below;

	EX13/17/21	EX27	EX35/40
Effective thread length mm	16 to 22	18 to 27	18 to 27
Strength	"8T" or higher		
Tightening Torque N•m(kgf•cm)	20 - 22 (204 - 224)		40 - 50 (408 - 510)
ROBIN genuine parts (Screw length; mm)	011-00802-50, Flange Bolt 25		011-01003-00, Flange Bolt 30

■ **SAE (inch) keyway-type crankshaft**

Washer; Use the washer (material; SS41P) with the thickness described below;

	EX13/17/21	EX27	EX35/40
Washer Thickness in. (mm)	0.177 (4.5) or over	0.248 (6.3) or over	0.236 (6.0) or over
ROBIN genuine part	020-00801-40, Washer	(NA)	(NA)
Thickness; mm	4.5		
OD; mm	28		
ID; mm	8.5		
Material;	SS41P		

Bolt; Select the proper bolt and tighten it to the specified tightening torque, as mentioned below;

	EX13/17/21	EX27	EX35/40
Thread dimensions	5/16 – 24UNF2B	7/16 – 20UNF2B	3/8 – 24UNF2B
Effective thread length in. (mm)	0.63 to 0.87 (16 to 22)	0.71 to 1.06 (18 to 27)	0.71 to 1.06 (18 to 27)
Strength	"8T" or higher		"10T" or higher
Tightening Torque N•m(kgf•cm)(ft•lb.)	20 - 22 (204 - 224) (14.8 - 16.2)	50 - 60 (510 - 612) (36.9 - 44.3)	45 - 55 (457 - 561) (33.2 - 40.6)

(No ROBIN genuine part is available.)

Key Location

When using the belt pulley with the extended boss on both side as shown in the illustration, put the spacer so that the key stays in the keyway portion of the crankshaft.

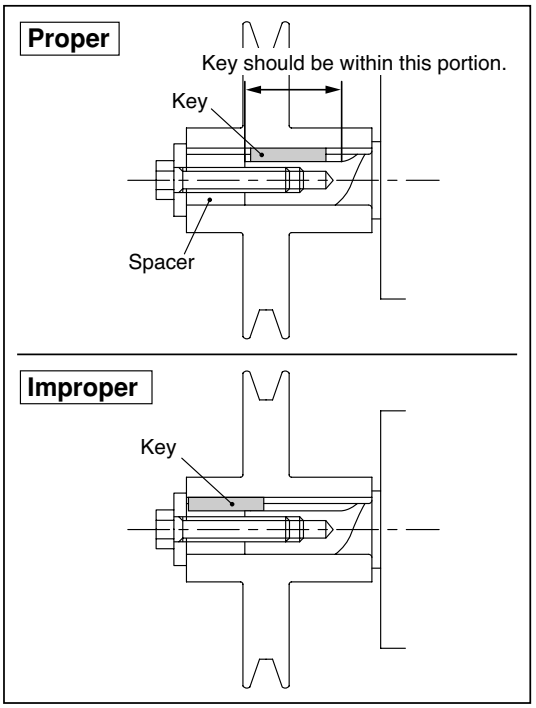

Belt Pulley Installation

Install the belt pulley in the no over-hang condition as shown in the illustration.

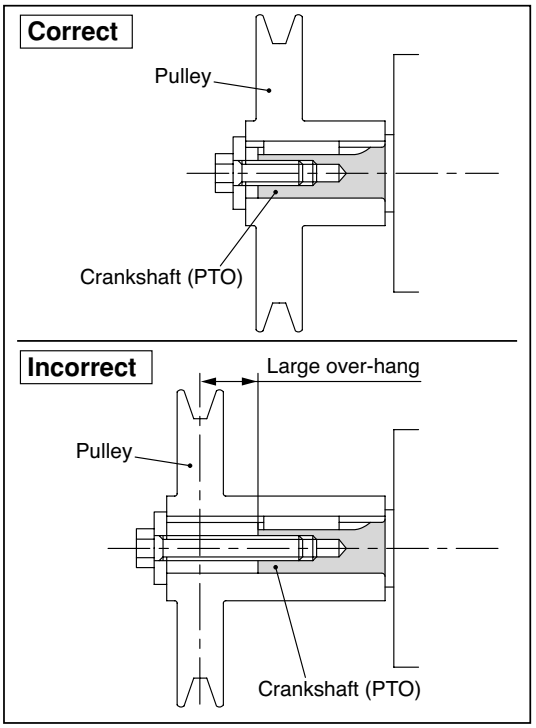

EN

Pulley fitting onto PTO shoulder

For proper pulley fitting onto PTO shoulder, make round chamfer at pulley corner.
Sharp edge of pulley corner strikes PTO shoulder. In this improper condition, bolt will be loosened, and PTO damaged finally.

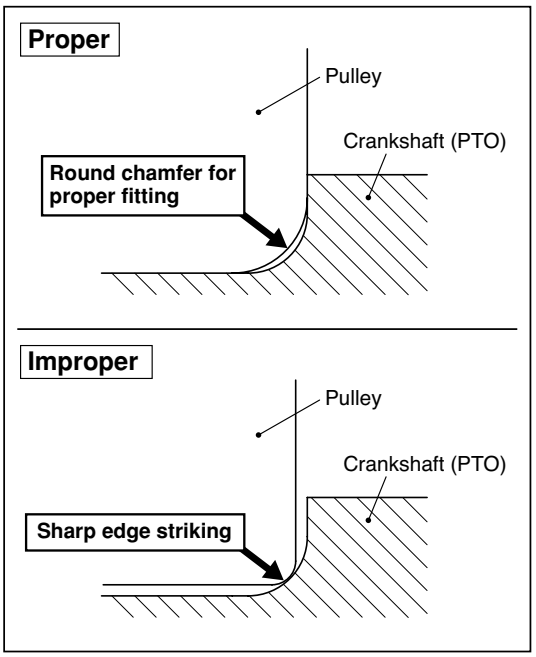

EN

6. OPERATING YOUR ENGINE (See Fig. 4)

1. STARTING

(1) Open the fuel cock. (See Fig.4-①)

(2) Turn the STOP SWITCH to the position " I " (ON). (See Fig.4-②)

(3) Set the speed control lever 1/3 of the way towards the high speed position. (Except EX30) (See Fig.4-③)

(4) Close the choke lever. (See Fig.4-④)

- If the engine is cold or the ambient temperature is low, close the choke lever fully.
- If the engine is warm or the ambient temperature is high, open the choke lever half-way, or keep it fully open.

(5) Pull the starter handle slowly until resistance is felt. This is the "compression" point. Return the handle to its original position and pull swiftly. Do not pull out the rope all the way. After starting the engine, allow the starter handle to return to its original position while still holding the handle. (See Fig.4-⑤)

FOR ELECTRIC STARTER MODELS.

Insert the key into the key slot and set it at the " I " (ON) position. Turn it to the right (START position) to start the engine. (See Fig.4-⑤)

- Do not operate the electric starter continuously for more than 5 secounds, even if the engine dose not start.
- If the engine failed to start, set the key to the " I " (ON) position and wait for about 10 secounds before retrying.
- Never turn the key switch to the START position while engine is running.

(6) After starting the engine, gradually open choke by turning the choke lever and finally keep it fully opened. Do not fully open the choke lever immediately when the engine is cold or the ambient temperature is low, because the engine may stop. (See Fig.4-⑥)

2. RUNNING

(1) After the engine starts, set the speed control lever at the low speed position (L) and warm it up without load for a few minutes. (See Fig.5-①)

(2) Gradually move the speed control lever toward the high speed position (H) and set it at the required engine speed. (See Fig.5-②)

- Whenever high speed operation is not required, slow the engine down (idle) by moving the speed control lever to save fuel and extend engine life.

3. STOPPING

(1) Set the speed control lever at the low speed position and allow the engine to run at low speed for 1 or 2 minutes before stopping. (See Fig.6-①)

(2) Turn the STOP SWITCH (or KEY SWITCH) counterclockwise to the position " ○ " (OFF). (See Fig.6-②)

(3) Close the fuel cock. (See Fig.6-③)

(4) Pull the starter handle slowly and return the handle to its original position when resistance is felt. This operation is necessary to prevent outside moist air from intruding into the combustion chamber. (See Fig.6-④)

※ STOPPING ENGINE WITH THE FUEL COCK

Close the fuel cock and wait for a while until the engine stops. Avoid to let the fuel remain in the carburator over long periods, or the passages of the carburator may become clogged with impurities, and malfunctions may result.

7. MAINTENANCE
(See Fig. 7)

1. DAILY INSPECTION (See Fig.7-①)

Before running the engine, check the following service items.

❶ Loose or broken bolts and nuts

❷ Clean air cleaner element

❸ Enough clean engine oil

❹ Leakage of gasoline and engine oil

❺ Enough gasoline

❻ Safe surroundings

❼ Excessive vibration, noise

2. PERIODIC INSPECTION

Periodic maintenance is vital to the safe and efficient operation of your engine.
Check the table below for periodic maintenance intervals. Should the engine be operated in extremely dusty condition or in heavier loading condition, the maintenance intervals must be shortened depending on the contamination of oil, clogging of filter elements, wear of parts, and so on.

3. INSPECTING THE SPARK PLUG (See Fig.7-②)

(1) Clean off carbon deposits on the spark plug electrode using a plug cleaner or wire brush.

(2) Check electrode gap. The gap should be 0.6 mm to 0.7 mm (0.02 inch.-0.03 inch.). Adjust the gap, if necessary, by carefully bending the side electrode.

Recommended Spark Plug : BR-6HS (NGK)

4. ENGINE OIL CHANGE (See Fig. 7-③,④)

Initial oil change : After 20 hours of operation
Thereafter : Every 100 hours of operation

(1) When changing oil, stop the engine and loosen the drain plug. Drain the used oil while the engine is warm. Warm oil drains quickly and completely.

EN

⚠ CAUTION

To prevent injury, pay attention to the hot oil.

(2) Re-install the drain plug before refilling oil.

Oil capacity (Upper level) :	(L)
EX13/17/21	0.6
EX27/30	1.0
EX35/40	1.2

(3) Refer to page 5 for the recommended oil.

■ Always use the best grade and clean oil. Contaminated oil, poor quality oil and shortage of oil cause damage to engine or shorten the engine life.

Maintenance items	Every 8 hours (Daily)	Every 50 hours (Weekly)	Every 200 hours (Monthly)	Every 300 hours	Every 500 hours	Every 1000 hours
CLEAN ENGINE AND CHECK BOLTS AND NUTS	● (Daily)					
CHECK AND REFILL ENGINE OIL	● (Refill daily up to upper level.)					
CHANGE ENGINE OIL	● (Initial 20 hours)	● (Every 100 hours.)				
CLEAN SPARK PLUG		● (Every 100 hours.)				
CLEAN AIR CLEANER		●				
REPLACE AIR CLEANER ELEMENT			●			
CLEAN FUEL CUP			●			
CLEAN AND ADJUST SPARK PLUG AND ELECTRODES			●			
CHECK AND ADJUST VALVE CLEARANCE				●		
REMOVE CARBON FROM CYLINDER HEAD					●	
CLEAN AND ADJUST CARBURETOR					●	
OVERHAUL ENGINE IF NECESSARY						●

5. CLEANING FUEL CUP (See Fig. 7-⑤)

⚠ WARNING **Flame Prohibited**

(1) Inspect fuel cup for water and dirt. (See Fig.7-⑤-❶)

(2) To remove water and dirt, close the fuel cock and remove the fuel cup.

(3) After removing dirt and water, wash the fuel cup with kerosene or gasoline. Reinstall securely to prevent leakage.

6. CLEANING AIR CLEANER (See Fig.7-⑥ thru ⑩)

EN

A dirty air cleaner element will cause starting difficulty, power loss, engine malfunctions, and shorten engine life extremely. Always keep the air cleaner element clean.

⚠ WARNING **Flame Prohibited**

A. Urethane Foam Element Type (See Fig.7-⑥)

Remove the element and wash it in kerosene or diesel fuel. Then saturate it in a mixture of 3 parts kerosene or diesel fuel and 1 part engine oil. Squeeze the element to remove the mixture and install it in the air cleaner. (See Fig.7-⑥-❶)

B. Dual Element Type (Urethane Foam and Paper elements) (See Fig.7-⑦)

■ Urethane Foam cleaning (See Fig.7-⑦-❶)
Wash and clean the urethane foam with detergent. After cleaning, dry it.
Clean the urethane foam every 50 hours.

■ Paper Element Cleaning (See Fig.7-⑦-❷)
Clean by tapping gently to remove dirt and blow off dust. Never use oil. Clean the paper element every 50 hours of operation, and replace element set every 200 hours.

C. Dual Element Type (Urethane Foam and Nonwoven Cloth elements) (See Fig.7-⑦)

■ Remove the urethane foam from the nonwoven cloth element and clean it in the same way as described **A**. (See Fig.7-⑦-❶)

■ Wash the element in kerosene and drain off the kerosene. Then saturate it in a mixture of **3 parts kerosene and 1 part engine oil**, wring the element to remove the mixture and install.(See Fig.7-⑦-❸)

D. For Generator Type (See Fig.7-⑧)

■ **EX17/21 (See Fig.7-⑧-❶,❷)**
Clean both elements in the same way as described **A** Urethane Foam Element Type.
Remove the frame before cleaning elements.

■ **EX27 (See Fig.7-⑧-❸,❹)**
Remove both elements and clean them in the same way as described **B** Dual Element Type (Urethane Foam and Paper elements).

E. With Pre-cleaner Type (See Fig.7-⑨)

Clean the elements (Fig.7-⑨-❶ and ❷) in the same way as described **B** Dual Element Type (Urethane Foam and Paper elements).Wash the dust pan of pre-cleaner (Fig. 7-⑨-❸) in water or kerosene and install it after drying.

F. Oil Bath Type (See Fig.7-⑩)

Clean the urethane foam (Fig. 7-⑩-❶) in the same way as described **A** Urethane Foam Element Type. Drain the dirty oil from the oil pan (Fig. 7-⑩-❷) and wash it in kerosene.
Then fill the new engine oil upto the specified oil level.

Oil Capacity in the Oil Bath (oil pan) :
EX13/17/21 . . . . . About 55 mL

NOTE
Instead of kerosene or diesel fuel, it is possible to wash the urethane foam element in a solution of mild detergent and warm water.
Then rinse the element thoroughly in clean water.
Allow the element to dry thoroughly. Soak the element in clean engine oil and squeeze out excess oil.

NOTE
Clean and replace air cleaner elements more often when operating in dusty environments. Replace the element in case that dirt or dust can not be removed and/or that the element is deformed or deteriorated.

7. FUEL HOSE REPLACEMENT (See Fig.7-⑪)

⚠ WARNING

Take extreme caution when replacing fuel hose ; gasoline is extremely flammable.

Replace the fuel hose every 2 years. If fuel leaks from fuel hose, replace the fuel hose immediately.

8. CHECKING BOLTS, NUTS AND SCREWS

■ Retighten loose bolts and nuts.

■ Check for fuel and oil leaks.

■ Replace damaged parts with new ones.

9. CHECK BATTERY

⚠ WARNING **Flame Prohibited**

If the electrolyte fluid is below level line, refill with distilled water to the upper level line.

8. PREPARATIONS FOR STORAGE

1. DISCHARGE FUEL (See Fig.8-①)

⚠ WARNING **Flame Prohibited**

If you do not use the engine more than 1 month, discharge fuel to prevent gum in the fuel system and carburetor parts.

- Remove the fuel cup, place it over a container and open the fuel cock to discharge fuel from the fuel tank.
- Remove the drain screw of the carburetor float chamber and discharge fuel.

2. ENGINE OIL

- Change the engine oil with fresh oil.
- Remove the spark plug, pour about 5 cc of engine oil into the cylinder, slowly pull the starter handle of the recoil starter 2 or 3 times, and reinstall the spark plug.

3. CLEAN AND STORE

- Slowly pull the recoil starter handle until resistance is felt and leave it in that position.
- Clean the engine thoroughly with an oiled cloth, put the cover on, and store the engine indoors in a well ventilated, low humidity area.

4. BATTERY CHARGING

⚠ WARNING **Flame Prohibited**

- The battery discharges itself even when not connected, therefore it is necessary to recharge it once a month.

9. OIL SENSOR INSTRUCTIONS

(OPTIONAL)

1. FUNCTION OF OIL SENSOR

The engine will stop automatically when the oil level falls below the safety limit. The engine cannot be started unless the level is raised above the prescribed limit. (See Fig.2-②)

2. RESTARTING

(1) Fill the crankcase with oil up to the proper level.

(2) As for restarting and operating the engine, refer to section **"6. OPERATING YOUR ENGINE"** on page 8 .

- Check the wire connector from the engine. It must be connected securely to the wire from oil sensor.
- When selecting the engine oil, refer to page 5 for the recommended oil.

10. EASY TROUBLESHOOTING

WHEN ENGINE WILL NOT START :

Perform the following checks before you take the engine to your Robin dealer. If you still have trouble after completing the checks, take the engine to your nearest Robin dealer.

1. Is there a strong spark across the electrode ?

(1) Is the stop switch at position " **I** " (ON)?

(2) Remove and inspect the spark plug.
If the electrode is fouled, clean or replace it with new one.

(3) Remove the spark plug and connect it to the plug cap. Pull the starter handle while grounding spark plug against engine body. Try with a new spark plug if the spark is weak or there is no spark.
The ignition system is faulty if there is no spark with a new spark plug.

EN

⚠ WARNING

- **Wipe out spilled fuel carefully before testing. Place spark plug as far away from spark plug hole as possible.**
- **Do not hold spark plug by hand while pulling recoil starter.**

NOTE
The engine with oil sensor will stop automatically when the oil level falls below the prescribed limit.
Unless the oil level is raised above the prescribed limit, the engine will stop immediately after starting.

2. Is there enough compression?

Pull the starter handle slowly and check if resistance is felt. If little force is required to pull the starter handle, check if the spark plug is tightened firmly. If the spark plug is loose, tighten it.

3. Is the spark plug wet with gasoline?

(1) Is the fuel cock opened?

(2) Choke (close choke lever) and pull the starter handle five or six times. Remove the plug and check if its electrode is wet. If the electrode is wet, fuel is well supplied to your engine.

(3) When the electrode is dry, check where the fuel stops. (Check the fuel intake of the carburetor.)

(4) In case the engine does not start with well supplied fuel, try using fresh fuel.

4. Is the battery well charged?

If the battery for the electric starter is discharged, the engine will not start.

11. SPECIFICATIONS

EN

MODEL		EX13D	EX17D	EX21D	EX27D
Type		Air-cooled, 4-cycle single cylinder, overhead camshaft, gasoline engine			
Displacement	mL (cc)	126	169	211	265
Continuous Output	kW/rpm (HP/rpm)	2.2/3600 (3.0/3600)	2.9/3600 (4.0/3600)	3.7/3600 (5.0/3600)	5.1/3600 (7.0/3600)
Maximum Output	kW/rpm (HP/rpm)	3.2/4000 (4.3/4000)	4.2/4000 (5.7/4000)	5.1/4000 (7.0/4000)	6.6/4000 (9.0/4000)
Direction of Rotation		Counterclockwise, as Viewed from P.T.O. Shaft side			
Lubricant		Automotive detergent oil (API/ SE or higher grade, SAE/ 10W-30 etc.)			
Oil Capacity	Liter	0.6			1.0
Fuel		Automotive Gasoline (Unleaded)			
Fuel Tank Capacity	Liter	2.7	3.6		6.1
Spark Plug		NGK BR-6HS			
Starting System		Recoil starter	Recoil starter / Electric starter		
Dry Weight	kg	14	15	16	21
Dimensions	(L x W x H) mm	297 x 341 x 318	304 x 354 x 335	311 x 366 x 335	355 x 420 x 410

MODEL		EX30D	EX35D		EX40D	
Type		Air-cooled, 4-cycle single cylinder, overhead camshaft, gasoline engine				
Displacement	mL (cc)	287	404			
Continuous Output	kW/rpm (HP/rpm)	5.5/3600 (7.5/3600)	6.3/3600 (8.5/3600)		7.0/3600 (9.5/3600)	
Maximum Output	kW/rpm (HP/rpm)	6.6/4000 (9.0/4000)	Net	Gross	Net	Gross
			7.4/3600 (10.0/3600)	8.8/3600 (12.0/3600)	8.8/3600 (12.0/3600)	10.3/3600 (14.0/3600)
Direction of Rotation		Counterclockwise, as Viewed from P.T.O. Shaft side				
Lubricant		Automotive detergent oil (API/ SE or higher grade, SAE/ 10W-30 etc.)				
Oil Capacity	Liter	1.0	1.2			
Fuel		Automotive Gasoline (Unleaded)				
Fuel Tank Capacity	Liter	—	7.0			
Spark Plug		NGK BR-6HS				
Starting System		Recoil starter / Electric starter				
Dry Weight	kg	21	33			
Dimensions	(L x W x H) mm	415 x 424 x 319	389 x 450 x 443			

- **Specifications are subject to change without notice**
- **Cold and damp weather conditions might cause your engine to trouble occasionally.**
  Engine operation in the cold weather condition will be improved by means of optional "Cold Weather Kit".
  Please consult with your nearest ROBIN dealer or distributor.
- **The following optional parts are also available at ROBIN distributor and/or dealer ;**
  1. Air Cleaner ; Oil bath type, Pre-cleaner type etc.
  2. Magneto for lighting usage ; 12V-15W/40W/200W
  3. Fuel Tank with fuel level gauge

A.2 Diesel engine Hatz 1B30 (optional)

Combustion engine

INSTRUCTION BOOK

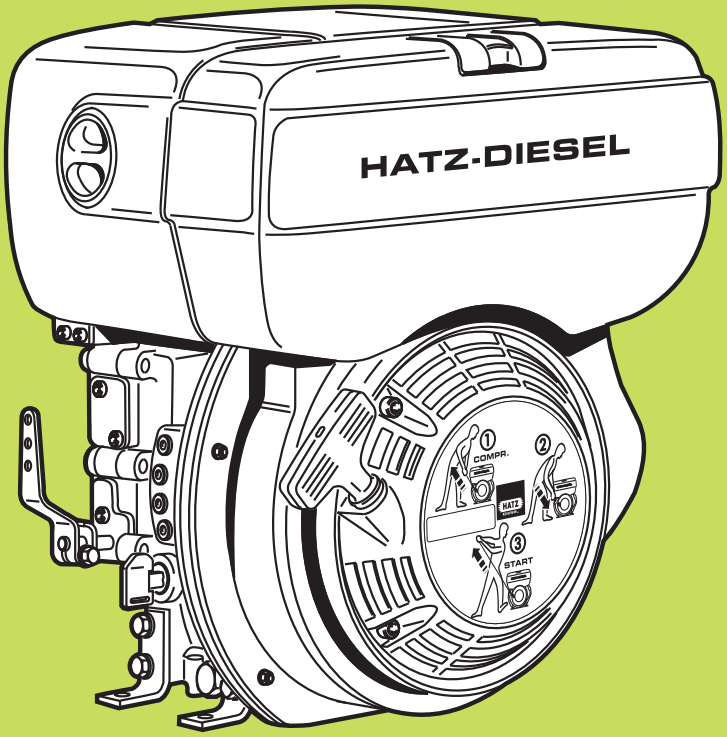

1B 20
1B 27
1B 30
1B 40
1B 50

433 802 07 - ENG - 10.05 - 3
Printed in Germany

33

A new HATZ Diesel engine - working for you

This engine is intended only for the purpose determined and tested by the manufacturer of the equipment in which it is installed. Using it in any other manner contravenes the intended purpose. For danger and damage due to this, Motorenfabrik HATZ assumes no liability. The risk is with the user only.
Use of this engine in the intended manner presupposes compliance with the maintenance and repair instructions laid down for it. Noncompliance leads to engine breakdown.

Please do not fail to read this operating manual before starting the engine. This will help you to avoid accidents, ensure that you operate the engine correctly and assist you in complying with the maintenance intervals in order to ensure long-lasting, reliable performance.

Please pass this Instruction Manual on to the next user or to the following engine owner.

The worldwide HATZ Service Network is at your disposal to advise you, supply with spare parts and undertake servicing work.
You will find the address of your nearest HATZ service station in the enclosed list.

Original - Ersatzteile
Original-spare parts
Pièces de rechange d'origine
Repuestos originales

Use only original spare parts from HATZ. Only these parts guarantee a perfect dimensional stability and quality. The order numbers can be found in the enclosed spare parts list. Please note the spare part kits shown in Table M00.

We reserve the right to make modifications in the course of technical progress.

MOTORENFABRIK HATZ GMBH & CO KG

Contents

This symbol identifies important safety precautions.
Please comply with these most carefully in order to avoid any risk of injury to persons or damage to materials.
General legal requirements and safety regulations issued by the competent authorities or industrial accident insurers must also be complied with.

1. Important safety notes when operating the engine

HATZ diesel engines are efficient, strong and durable. For this reason they are frequently installed on equipment used for commercial purposes.
The manufacturers of such equipment must observe any relevant equipment safety regulations when the engine forms part of an overall system.
A few general points concerning operating safety should none the less be noted.
Depending on the engine's operating and installation conditions, equipment manufacturers and their users may have to fit safety or protective devices in order to prevent improper use. Examples:

– Exhaust system components as well as the surface of the engine will naturally be hot and must not be touched while the engine is running or until it has cooled down after being stopped.

– Incorrect wiring or improper operation of the electrical system may cause sparking and must therefore be avoided.

– Provide protection against contact with rotating parts once the engine is connected to the driven equipment or machine.
  HATZ protective guards are available for the belt drive of the cooling fan and alternator drive systems.

– Always observe the start-up information in the operating instructions before starting the engine: **this is particularly important when starting an engine with the recoil starter**.

– Mechanical starting devices should not be operated by children or persons deficient in physical strength.

– Check that all safety devices are in place before starting the engine.

– Ensure that operation, maintenance and repair of the engine are undertaken by suitably trained personnel only.

– Protect the starter key against unauthorised use.

– Do not run the engine in closed or badly ventilated rooms.
  Do not breath in emissions – danger of poisoning !

– Also fuel and lubricants could contain poisonous components. Please follow the instructions of the mineral oil producer.

Important safety notes when operating the engine

– The engine must be stopped before performing any maintenance, cleaning- or repair work.

– Stop the engine before refilling the fuel tank.
Never refuel near a naked flame or sparks which could start a fire. Don't smoke. Don't spill fuel.

– Keep explosive materials as well as flammable materials away from the engine because the exhaust gets very hot during operation.

– Wear close-fitting clothing when working on the engine while it is running.
Please don't wear necklaces, bracelets or any other things which you could get caught with.

– Please pay attention to all advice- and warning stickers placed on the engine and keep them in legible condition. Contact your next **HATZ service station**, if a sticker comes off or is illegible and ask for a new one.

– We accept no liability for damage resulting from improper modifications to the engine.

Regular maintenance in accordance with the details given in these operating instructions is essential to keep the engine in good working order.

When in doubt, consult your local **HATZ service station** before starting the engine.

2. Description of the engine

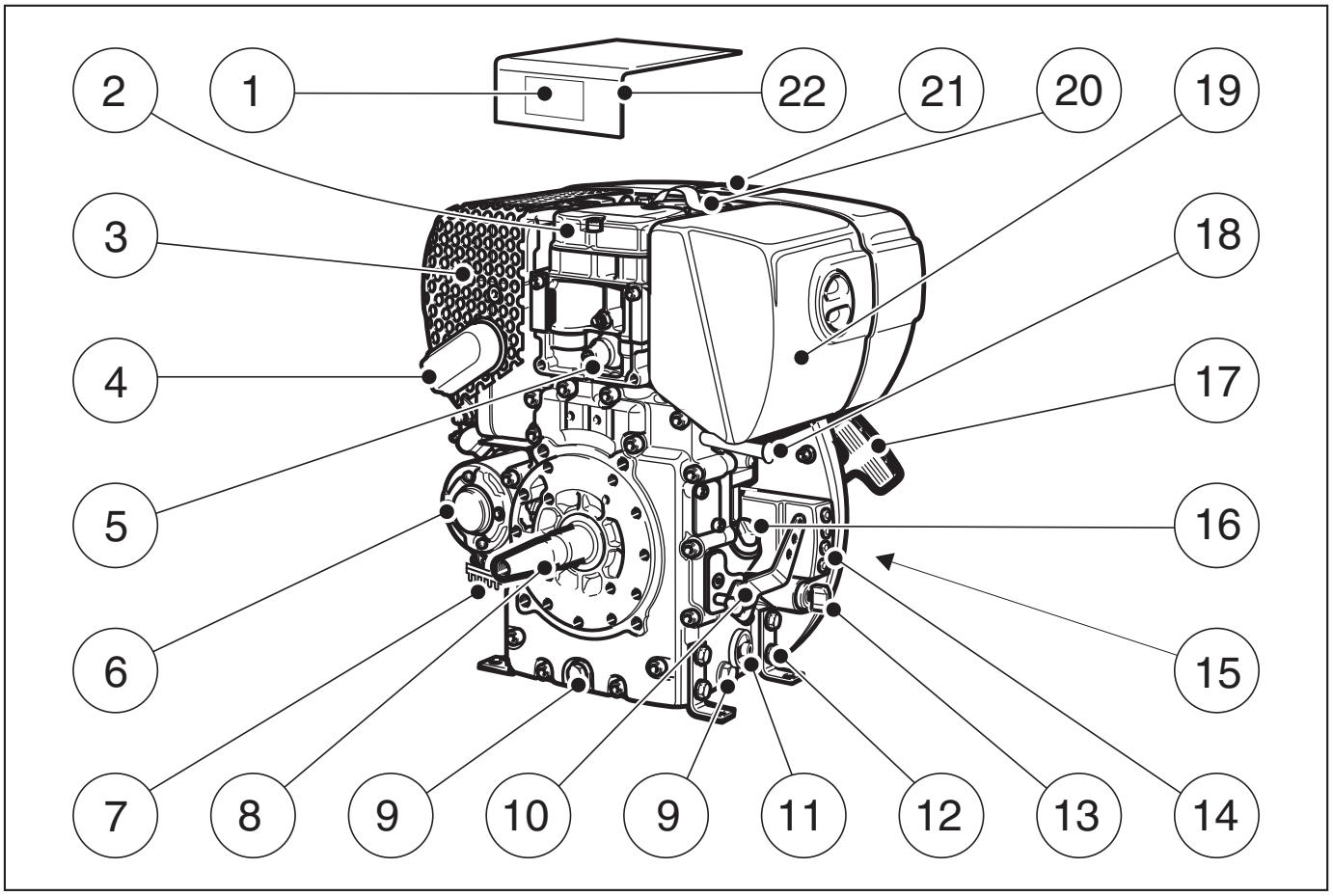

1

1 Type plate
2 Cylinder head cover
3 Exhaust silencer
4 Exhaust mesh insert
5 Oil pressure switch
6 Starter motor
7 Voltage regulator
8 Crankshaft - power take-off
9 Oil drain plug
10 Speed adjustment lever
11 Oil filter
12 Engine mountings
13 Ignition key
14 LED display
15 Intake opening for cooling and combustion air
16 Oil filler pipe and dipstick
17 Recoil starter
18 Engine shutdown pin
19 Dry-type air cleaner
20 Lifting lug (see also Fig 41, Pos. 1)
21 Fuel tank cap
22 Noise insulating hood

3. General notes

3.1. Technical data

Type		1B20	1B27	1B30	1B40	1B50
Design		Air-cooled four-stroke diesel engine				
Combustion system		Direct injection				
Number of cylinders		1	1	1	1	1
Bore / stroke	mm	69 / 62	74 / 62	80 / 69	88 / 76	93 / 76
Displacement	cm^3	232	267	347	462	517
Lubricating oil capacity without oil sump with oil sump	 l, approx. l, approx.	 0.9 1) 2.6 1)	 0.9 1) –	 1.1 1) 2.8 1)	 1.5 1) 3.2 1)	 1.5 1) –
Difference between “max” and “min” levels without oil sump with oil sump	 l, approx. l, approx.	 0.5 1) 1.6 1)	 0.5 1) –	 0.5 1) 1.8 1)	 0.8 1) 2.2 1)	 0.8 1) –
Lubricating oil consumption (after running in)	max.	1 % of fuel consumption at full load				
Lubricating oil pressure (oil temperature 100 °C)	approx.	2.5 bars at 3000 r.p.m.				
Direction of rotation, power take-off end		anti-clockwise				
Valve clearance 10 - 30 °C Inlet and exhaust valve	mm	0.20	0.10	0.10	0.10	0.10
		or automatically 2)				
Max. tilt angle in operation, in direction		Flywheel 25° down 3) all other directions 35° 3)				
Weight (incl. fuel tank, air-cleaner, exhaust silencer, recoil starter and electric starter)	kg, approx.	33	34	40	55	56
Battery capacity	Amp/h	max. 12 V / 60 Amp/h				

1) These values are intended as an approximate guide. The **max.** marking on the dipstick is the determining factor, Fig. 7.

2) Depending on model (see maintenance charts, chapter 5.1).

3) Exceeding these limits causes engine breakdown.

Tightening torques

Item	Nm
Oil drain plug	50

3.2. Transport

Standard lifting lug „20“ is to allow the engine and its auxiliaries to be transported safely, chap. 2. It is not suitable or approved for lifting the complete equipment to which the engine is attached.

3.3. Notes on installation

The „Guide to selecting and installing an engine“ contains all the necessary information on engine applications if you have an engine which has not yet been installed in equipment and still has to be fitted or set up. This guide is available from your local HATZ service station.

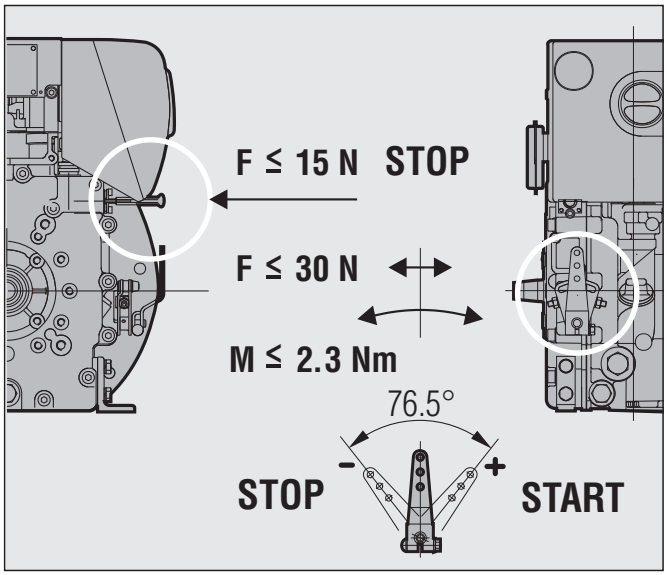

2

Do not exceed the forces and torques indicated on the speed adjustment lever and the stop pin, otherwise you may damage the stops and internal governor components.

3.4. Load on engine

Operating the engine for a lengthy period off-load or at very low loads can affect its running quality. We therefore recommend a minimum engine load of 15 %. If operated at such low loads, it is best to operate the engine at a significantly higher load for a short period before switching it off.

3.5. Type plate

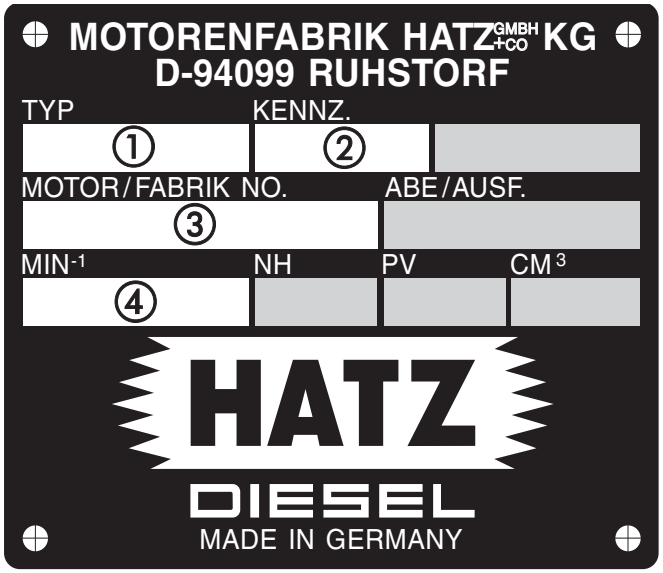

3

The type plate is placed on the noise insulating hood (Fig. 1, pos. 1) and includes the following engine information:

① engine type
② code (only for special equipment)
③ engine number (also stamped on crankcase, Fig. 4)
④ max. engine speed

For any offer as well as spare parts orders it is necessary to mention these data (also see spare parts list, page 1).

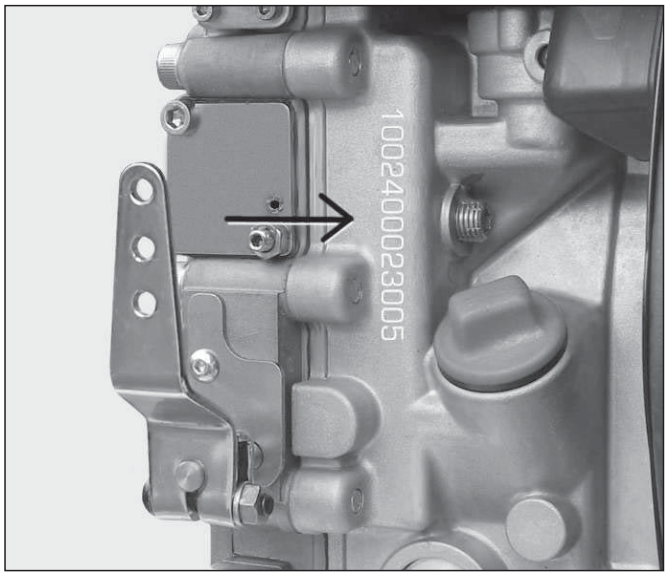

4

Engine serial number on crankcase

4. Operation

4.1. Before starting up for the first time

Engines are normally supplied dry, i.e. not containing fuel or oil.

4.1.1. Engine oil

Oil quality
Qualified are all trademark oils which fulfil at least one of the following specifications:

ACEA – B2 / E2 or more significant
API – CD / CE / CF / CF-4 / CG-4 or more significant.

If engine oil of a poorer quality is used, reduce oil change intervals to 150 hours of operation.

Oil viscosity

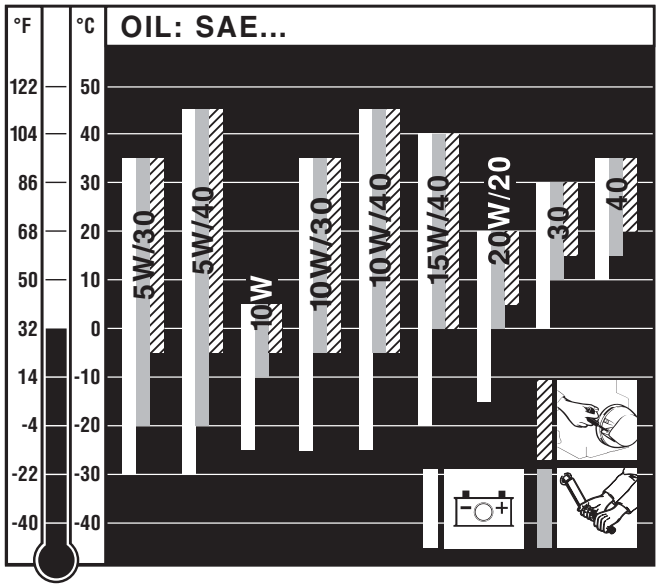

5

Select the viscosity class according to the ambient temperature for cold starts.

When adding oil or checking the oil level, the engine must be horizontal.

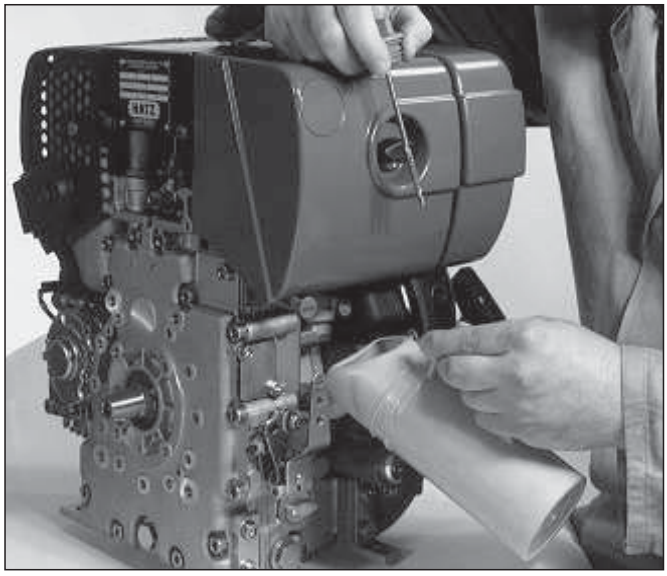

6

– Remove oil filler screw and add engine oil. Lubricating oil capacity: see Chapter 3.1.

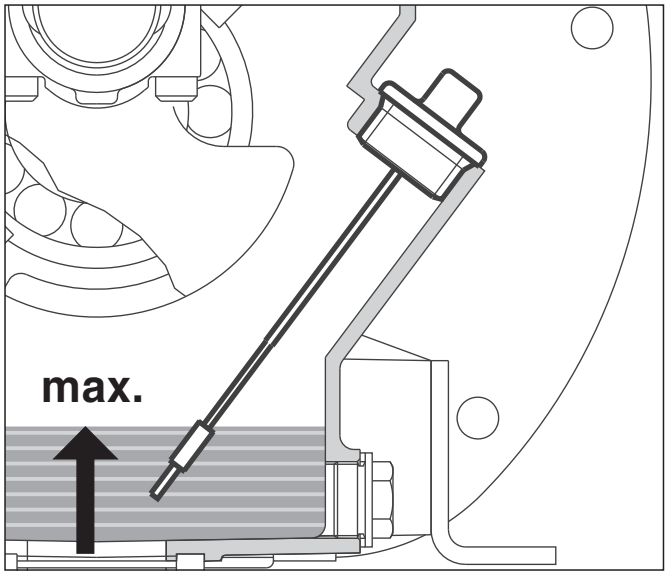

7

– To check the oil level, remove the dipstick, clean it - then screw it back in and finally remove it again.
Check the oil level on the dipstick and, if necessary, top up to the **max.** level.

4.1.2. Version with oilbath air cleaner

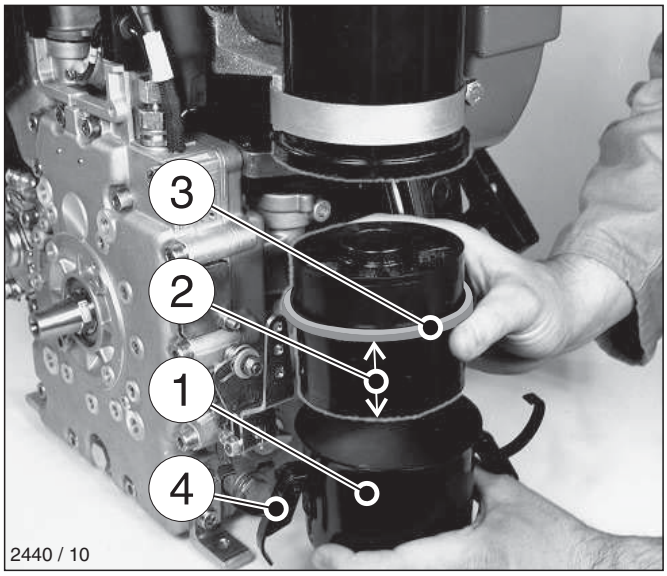

8

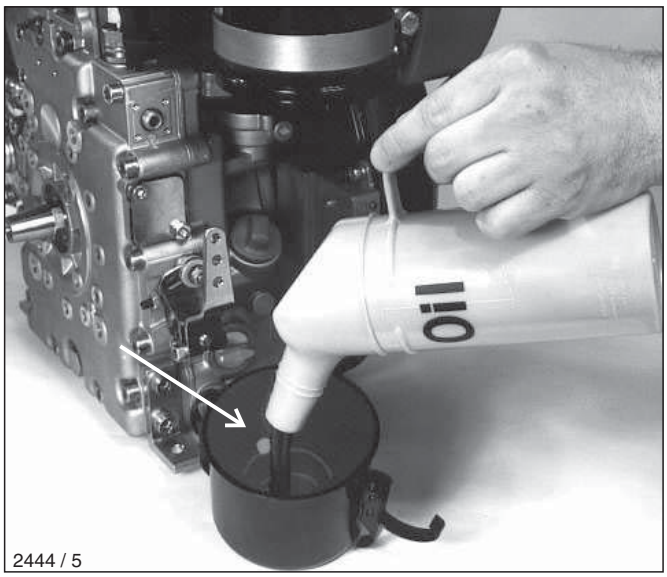

9

– Take off oil reservoir „1“ and fill with engine oil as far as the mark, Figs. 8 and 9.

– Insert the filter element into the oil reservoir with the long end „2“ leading, Fig. 8.

– Attach the oil reservoir, making sure that sealing ring „3“ is correctly seated and fasteners „4“ are tight.

4.1.3. Fuel

⚠ **Stop the engine before refilling the fuel tank. Never refuel near a naked flame or sparks which could start a fire. Don’t smoke. Use only pure fuel and clean filling equipment. Take care not to spill fuel.**

All diesel fuels which satisfy the following specifications are suitable:

EN 590 or
BS 2869 A1 / A2 or
ASTM D 975 - 1D / 2D

10

– Remove fuel tank cap.

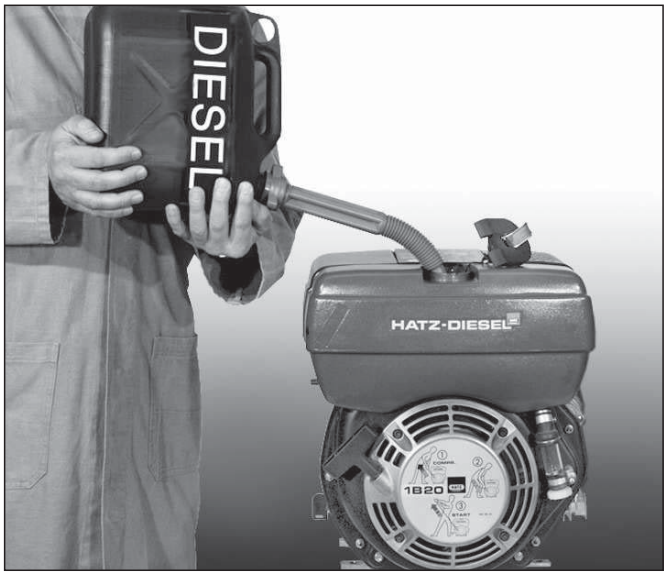

11

– Before the first start or if the fuel tank has been run dry, completely fill the fuel tank with diesel. The bleeding of the fuel system is automatically.

Note:
If a **double fuel filter system** is provided (Chapter 5.4.1), wait for a short time after replenishing fuel (approx. 1 to 2 minutes) for automatic bleeding to be completed.

12

– Close and fix fuel tank cap.

At temperatures below 0 °C, winter-grade fuel should be used or paraffin added to the fuel well in advance.

Lowest ambient temperature when starting, in °C	Paraffin content for:	
	Summer fuel	Winter fuel
0 up to –10	20 %	–
–10 up to –15	30 %	–
–15 up to –20	50 %	20 %
–20 up to –30	–	50 %

4.2. Starting

⚠ **Do not run the engine in closed or badly ventilated rooms – danger of poisoning! Before starting the engine, ensure that no-one is in the danger area close to the engine or equipment, and that all protective guards are fitted.**

4.2.1. Preparations for starting

If possible, disengage the engine from any driven equipment.
The auxiliary equipment should always be placed in neutral.

– First of all set the speed adjuster to the STOP position, Figures 13 and 14, then move it to the starting position.

Speed adjuster, standard version

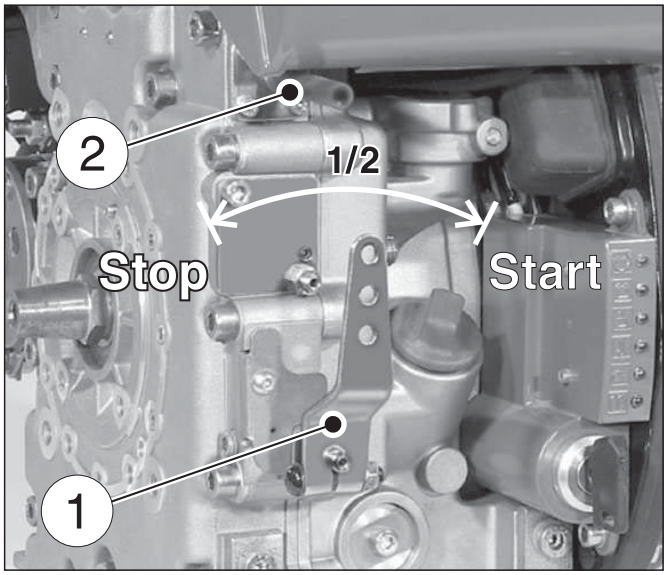

13

– Set speed adjustment lever „1“ either to 1/2 START or max. START position, as desired or necessary.
  Starting at a lower speed will help to prevent exhaust smoke.

Speed adjuster with pull rod

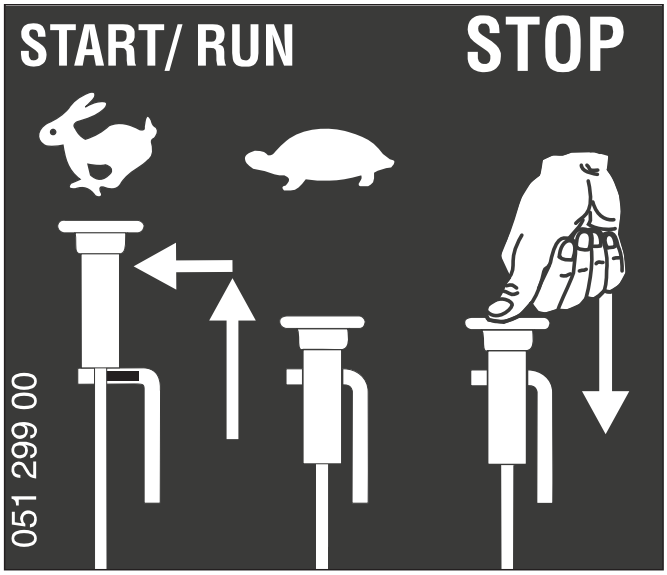

14

– Move speed adjuster to the „START/RUN“ position.

Now, the engine is ready for starting.

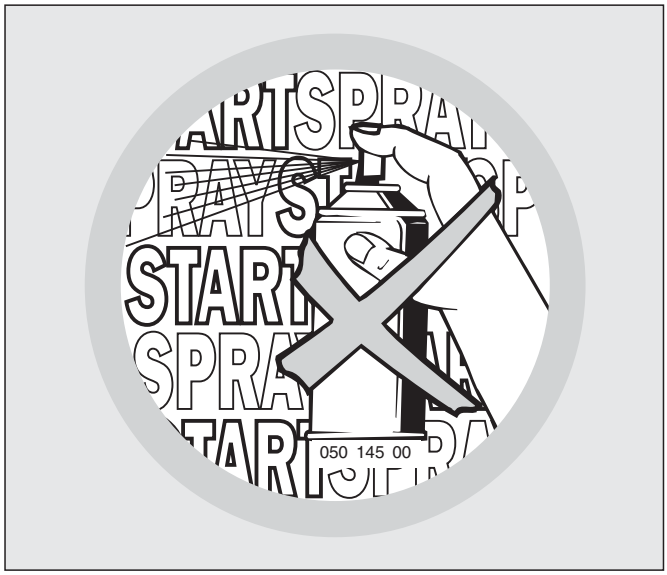

15

⚠ **Never use starting sprays !**

Important !
After long-time standstill (approx. 6 months or even longer) or first operation, operate engine with low adjusted speed and without load for approx. 20 sec. after start. This measure assures a lubrication of all bearings before increasing speed and load.
It also prevents an insufficient lubrication.

4.2.2. Recoil starter (down to –6 °C)

– For starting preparations, see Chapter 4.2.1.

Starting procedure

16

– Pull the starting cable out by the handle until you feel a slight resistance.

– Let the cable run back; in this way the entire length of the starting cable can be used to start the engine.

– Devices which are not securely fastened should be restrained with the foot.

17

– Grip the handle with both hands.

18

– Commence pulling the starting cable vigorously and at an increasing speed (do not jerk it violently) until the engine starts

Note:
If after several attempts of starting the exhaust begins to emit white smoke, move the speed adjustment lever to the STOP position and pull the starting cable out slowly 5 times.
Repeat the starting procedure, Chapter 4.2.1.

4.2.3. Electric starter

– For starting preparations, see Chapter 4.2.1.

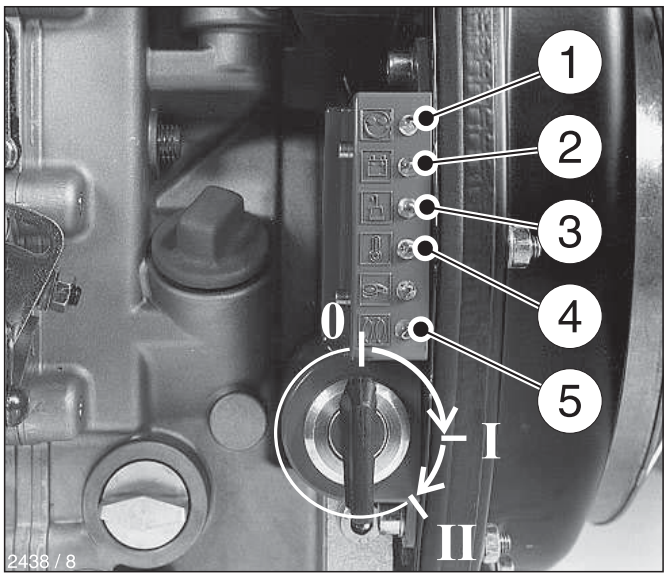

19

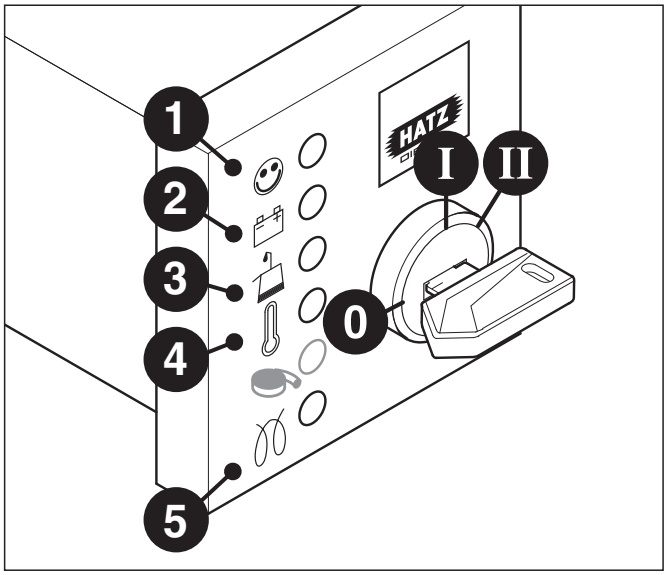

20

– Insert the key **to its stop** and turn it to **position I**, Fig. 19 and Fig. 20.

Depending upon the model, the battery charge telltale „2“ and the oil pressure warning light „3“ will come on.
The engine temperature display „4“ (additional equipment) lights up if the temperature at the cylinder head becomes too high.
Switch off the engine and trace and eliminate the cause of the problem, see chapter 6.

– Turn the key to **position II**.

– Release the key as soon as the engine runs. The starting key must spring back to **position I** and remain there during engine operation.

– The battery charge and oil pressure lights should extinguish directly after the engine starts. The display lamp „1“ lights up to show that the engine is running.

– Prior to starting up again, the key has to be returned to **position 0**. When the engine is running the starter repeat lock in the ignition switch will prevent the starter from engaging and suffering damage.

Preheater system (optional extra)

When starting a **cold** engine, the preheat indicator „5“ will light, Fig. 19 and Fig. 20.

– Start the engine immediately after the light goes out.

Fuel shut-off valve, stop solenoid
(additional equipment)

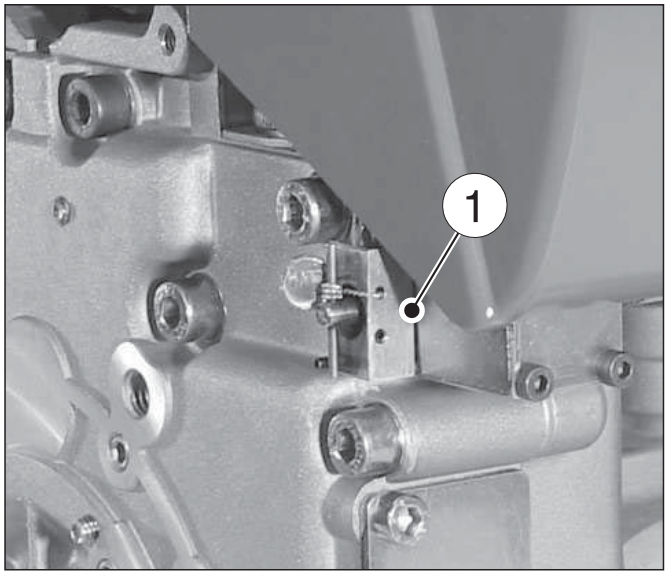

21

As soon as the starting key is at **Position I**, **fuel shut-off valve** „1“ is **electrically released**. The fuel feed to the injection pump is then open and the engine is ready to start.

When the engine is running, turning the starting key to **position 0 closes** the **cut-off valve** and interrupts the fuel supply to the injection pump, so that the **engine stops**; Chapter 4.3.
This shut-off valve is also used for the automatic electrical shutdown system.

Emergency start

If the **shut-off valve** is blocking the fuel supply as a result of an **electrical fault** and the **engine therefore cannot be started**, an emergency start can be attempted.
Proceed as follows for this:

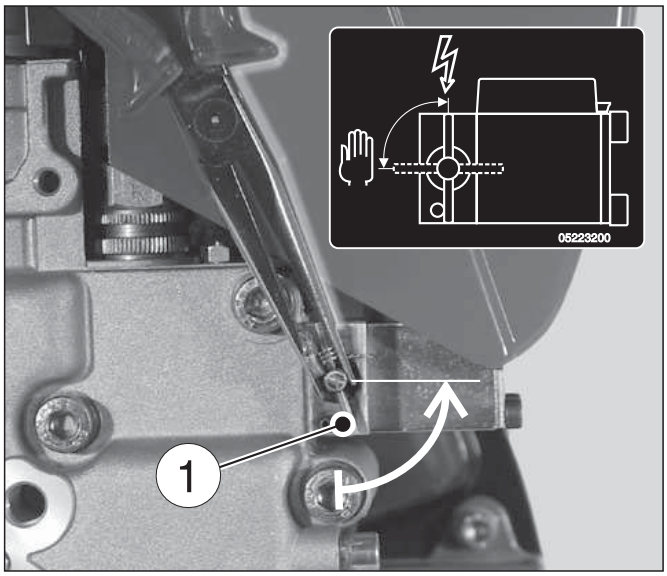

22

– For emergency starting, turn the lever at fuel shut-off solenoid „1“ anti-clockwise by at least 90° using suitable pliers. The lead seal wire will break off.

– As soon as the emergency start lever is in the starting position, the electric starter or recoil starter can be used; Chapter 4.2.2.
  The oil level must always be checked before an emergency start, as insufficient oil pressure can lead to complete damage of the engine within a very short time.

⚠ After this, the engine can only be stopped with the starting key in the emergency operating mode if the emergency starting lever is first turned back **clockwise** to the stop position.

Immediately after a period of emergency running, ascertain the cause of the fault and have it rectified; Chapter 6.
Have the emergency-starting lever sealed once again by a **HATZ service point**.

When the automatic electrical shutdown system is used, the emergency start described above means that liability for risks must be accepted by the operator **(Motorenfabrik HATZ assumes no liability)**.
In case of difficulty contact the nearest **HATZ service point**.

Automatic electrical shutdown system
(additional equipment)

Model <u>with</u> error memory
This is characterized by a brief flashing of all pilot lamps once the starter key has been turned to **position I** (Fig. 19 and 20).

Important!
If the engine cuts out immediately after starting or switches off by itself during operation, a monitoring element in the automatic shutdown system has tripped. The corresponding indicator light (Fig. 20, positions 2 - 4) will come on.
After the engine has stopped, the display continues to glow for about 12 seconds.
The electrical device then switches itself off automatically.
The display lights up again after the start key has been turned back to **position 0** and then to **position I** again.
Trace and eliminate the cause of the operating fault before trying to restart the engine
(see chapter 6.2).

The display light goes out when the engine is next started.

Model without error memory
This model has no specific characteristic which appears externally. If the engine stops immediately after starting, this indicates a reaction of a monitoring element of the automatic shut-off feature. Before performing further starting attempts, locate and eliminate the malfunction (Chapter 6.2).

Even with automatic shutdown monitoring the oil level must be checked every 8 – 15 operating hours (Chapter 5.2.1.).

4.3. Stopping the engine

Speed adjuster, standard version

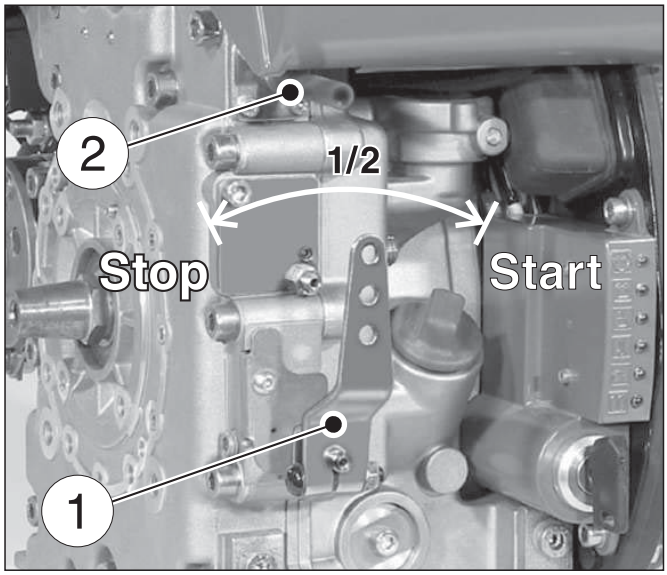

23

– Move the speed adjustment lever „1“ back to the STOP position. The engine cuts out.

Note:
Engines with a **fixed lower idling speed** cannot be switched off using the speed adjustment lever. See the paragraph entitled „Other ways of switching off the engine“.

Speed adjuster with pull rod (optional extra)

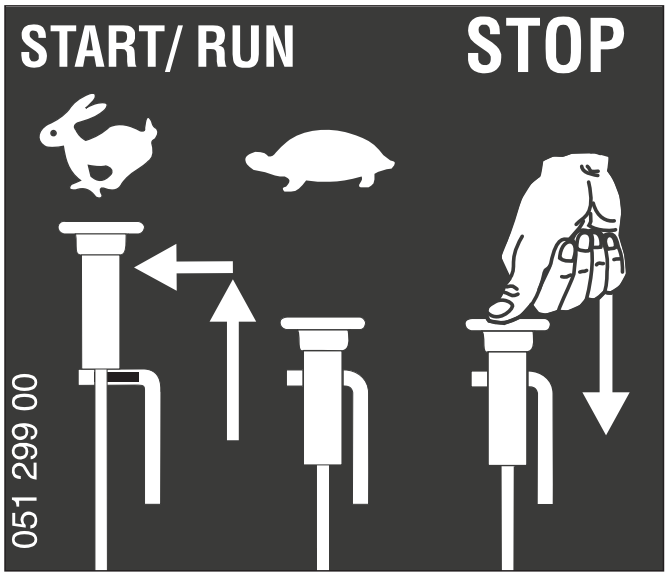

24

– Move the speed adjuster to the „STOP“ position and press it until the engine cuts out.

Other ways of switching off the engine

1. Fuel shut-off valve, stop solenoid
(optional extra)

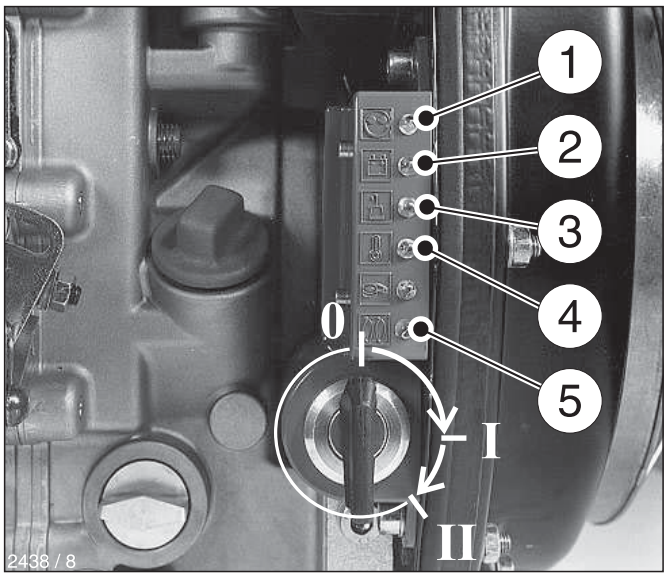

25

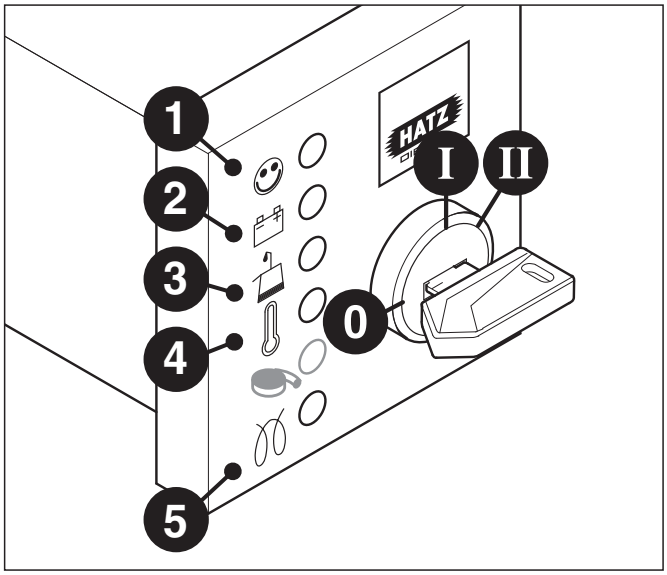

26

– Turn ignition key to the **0 position**. The engine cuts out, Fig 25 and Fig. 26.

2. Stop pin (optional extra)

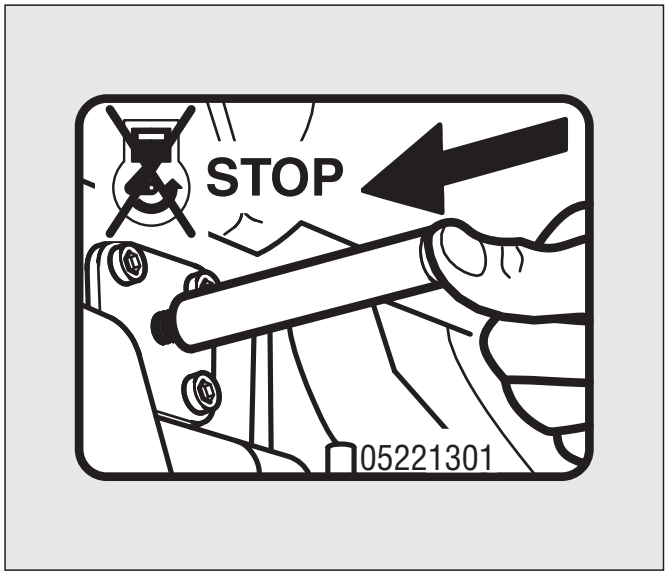

27

– Press the stop pin until the engine cuts out, also see Fig. 23, position 2.

– Once the engine has cut out, release the pin „2“ and ensure that it returns to its initial position.

Depending upon the model, the battery charge indicator „2” and oil pressure warning indicator „3“ will come on again after the engine comes to a stop, Fig. 25 and Fig. 26.

– Turn the key to **position 0** and remove it. All the indicator lights must go out, Fig. 25 and Fig. 26.

Note:
Failure to return the starter key to **position 0** may result in the battery being totally discharged.

⚠ **If operation of the engine is interrupted for any reason, or at the end of the working day, the starter key should be kept out of reach of unauthorised persons.**

5. Maintenance

Only carry out maintenance work with the engine switched off.
Observe all relevant laws and regulations governing the handling and disposal of used oil, filters and cleaning agents.
Protect the starting key against unauthorised use.
On engines with an electric starter, disconnect the battery's negative terminal.
When maintenance work has been completed, check that all tools have been removed from the engine and all protective guards fitted again.
Before starting the engine, ensure that there are no persons in the danger area close to the engine or equipment.

5.1. Maintenance chart

	Maintenance interval	Maintenance work required	Chap.
8-15	Every 8 – 15 operating hours, or before each daily start-up	Check oil level. Examine the lower section of the oilbath air cleaner to ensure correct oil level and freedom from contamination; change the oil if it contains sludge. On version with cyclone-type dust trap, empty the dust collector. Check combustion and cooling air intake zone. Check air-cleaner maintenance indicator. Check the water trap.	5.2.1. 4.1.2. 5.3.1. 5.3.1. 5.2.2. 5.2.3. 5.2.4.
250	Every 250 operating hours	Oilbath air cleaner maintenance. Change engine oil. Check and adjust valve clearances. (Not applicable with automatic self adjusting valve clearance models, see next page) Clean cooling air area. Check screw connections. Clean mesh insert for exhaust.	5.3.1. 5.3.2. 5.3.3. 5.3.4. 5.3.5. 5.3.6.
500	Every 500 operating hours	Change fuel filter element. Dry-type air cleaner maintenance.	5.4.1. 5.4.2.
1000	Every 1000 operating hours	Clean the oil filter.	5.5.1.

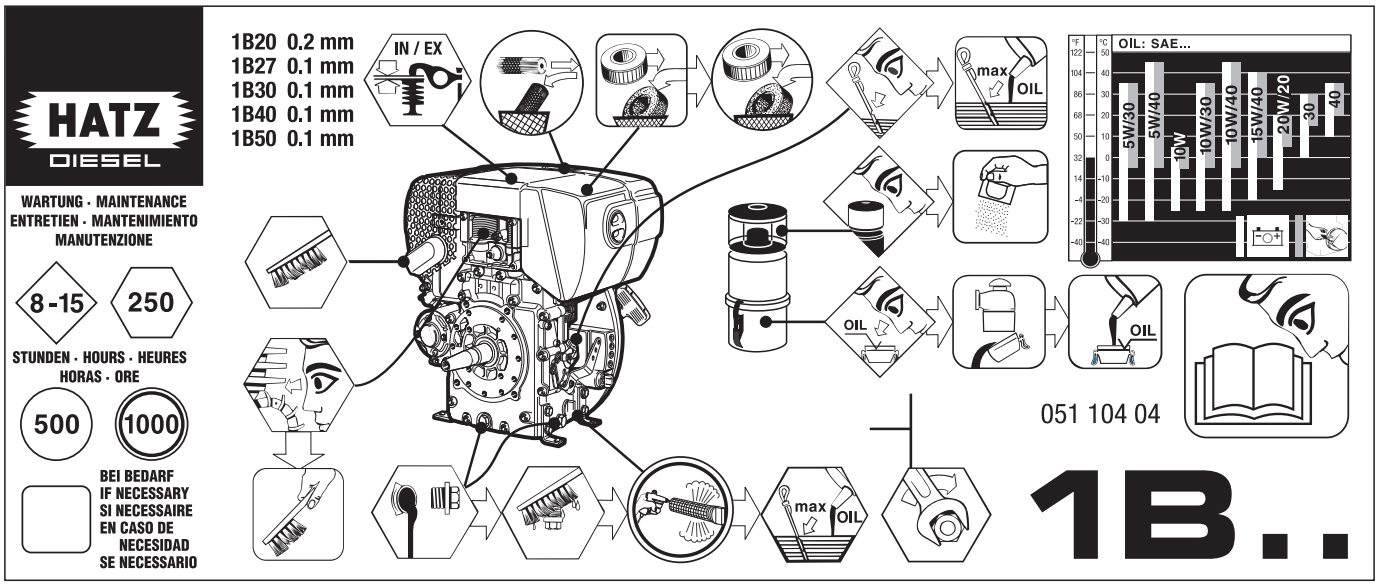

Model **without** automatic valve clearance adjustment.

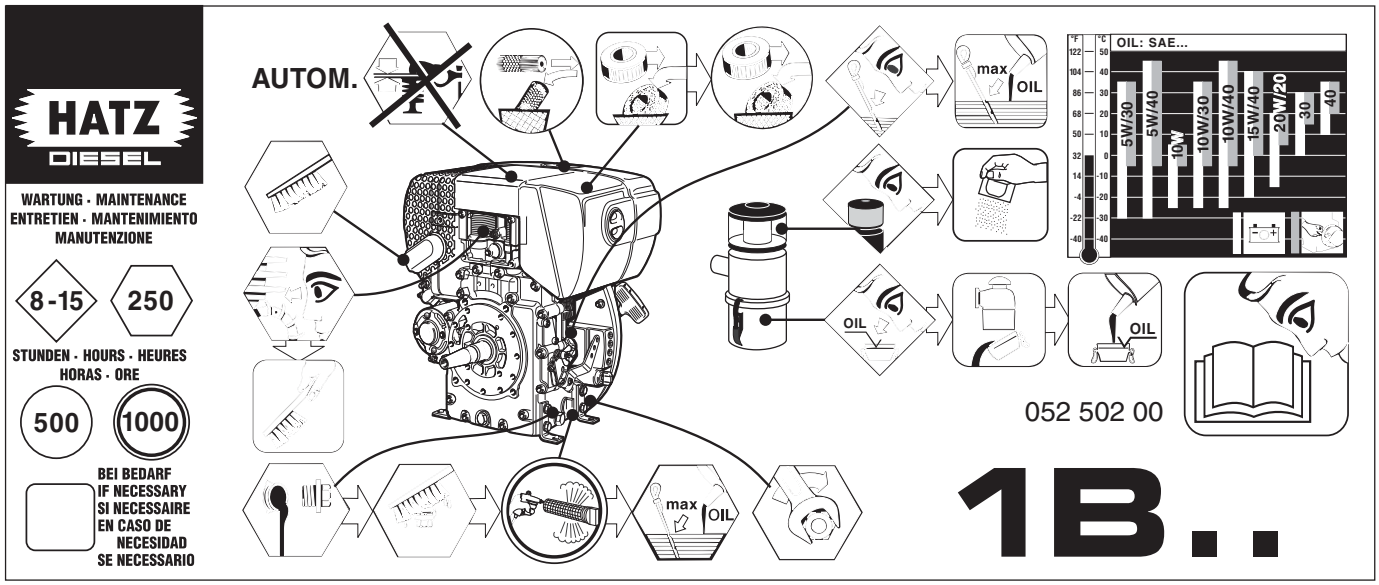

Model **with** automatic valve clearance adjustment.

Depending whether the engine is equipped with or without automatic valve clearance adjustment one of the illustrated maintenance plans is included. This label should be affixed to the engine or equipment in an easily visible position. The maintenance chart governs the maintenance intervals.

On **new** or **reconditioned engines, after the first 25 operating hours**, always

– Change engine oil, Chapter 5.3.2.

– Check valve clearances and adjust if necessary, Chapter 5.3.3.

– Examine screw connections, chapter 5.3.5. **Do not tighten the cylinder head fastening.**

If the engine is not used frequently, change the engine oil after **12 months at the latest**, regardless of the actual number of hours it has been in operation.

5.2. Maintenance every 8–15 operating hours

5.2.1. Checking engine oil level

To check the oil level, the engine must be standing level and be switched off.

– Remove any dirt from the oil dipstick area.

– Remove dipstick and clean it.

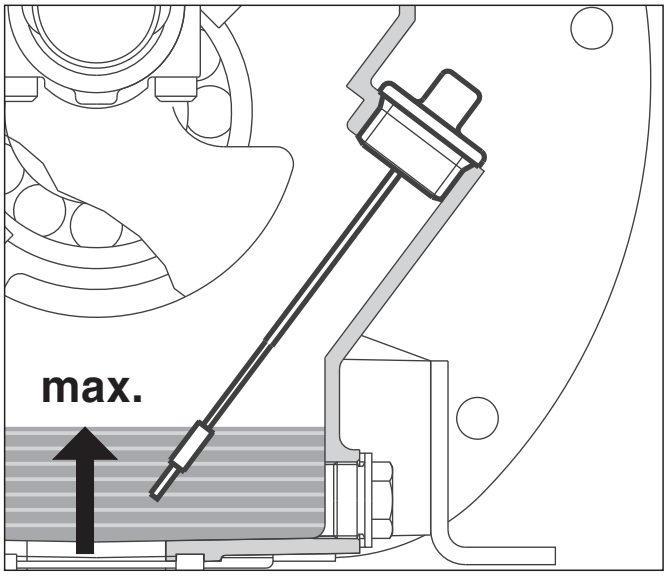

28

– To check the oil, screw the dipstick back in and then remove it again.

– Check the dipstick oil level and, if necessary, add oil to the **max.** mark, Chapter 4.1.1.

5.2.2 Check air intake area for combustion and cooling

Heavy contamination is an indication that increased dust accumulation necessitates a correspondingly shorter maintenance interval, Chapter 5.3.1., 5.3.4. and 5.4.2.

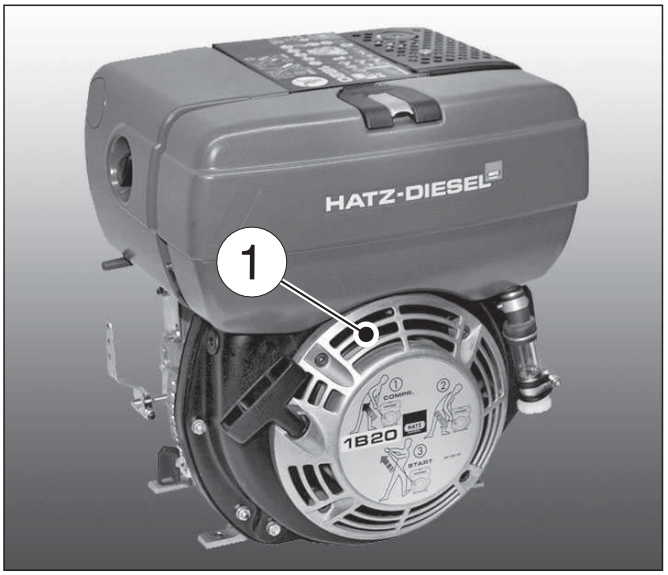

29

– Check air intake points for severe blockage due to leaves, heavy dust accumulation etc., and if necessary clean them.

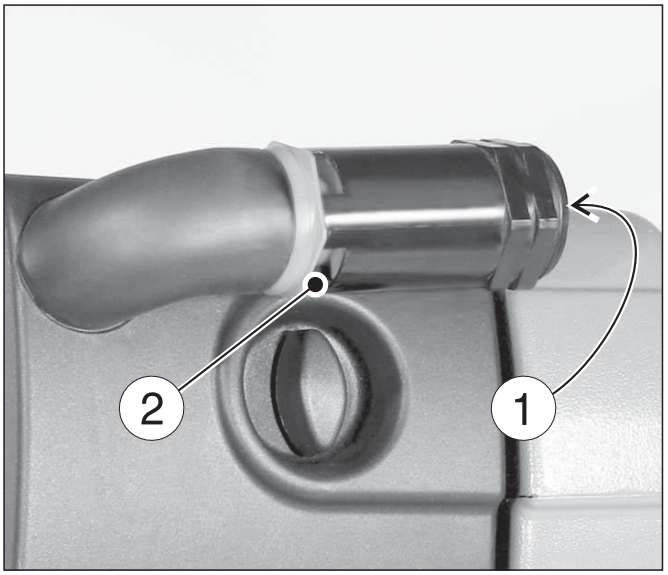

30

– For models fitted with cyclone, additionally check if inlet point „1“ is clear. Make sure that dust outlet „2“ is not blocked and clean if necessary.

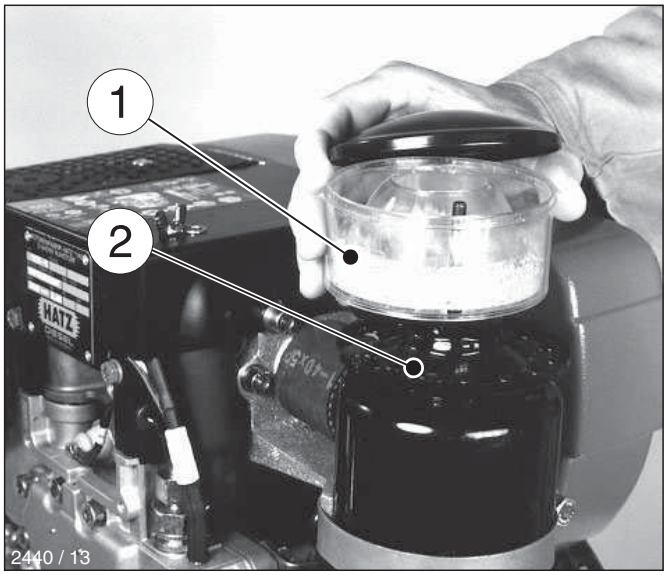

31

– On version with oilbath air cleaner, also check air intake area „2“.

5.2.3. Check air cleaner maintenance indicator (optional extra)

Mechanical service indicator

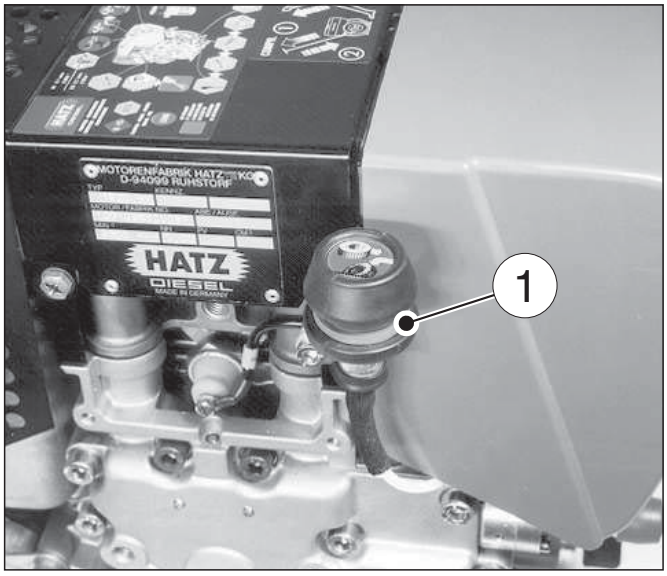

32

– Increase the speed of the engine briefly to the maximum.
  If the **rubber bellows shrinks** and covers the green area „1“, the air cleaner system should be serviced, Chapter 5.4.2.
  Under dusty conditions, check the rubber bellows several times per day.

5.2.4. Checking the water trap

The intervals at which you should check the water trap depend entirely on the amount of water in the fuel and the care taken when refuelling. The normal interval is once a week.

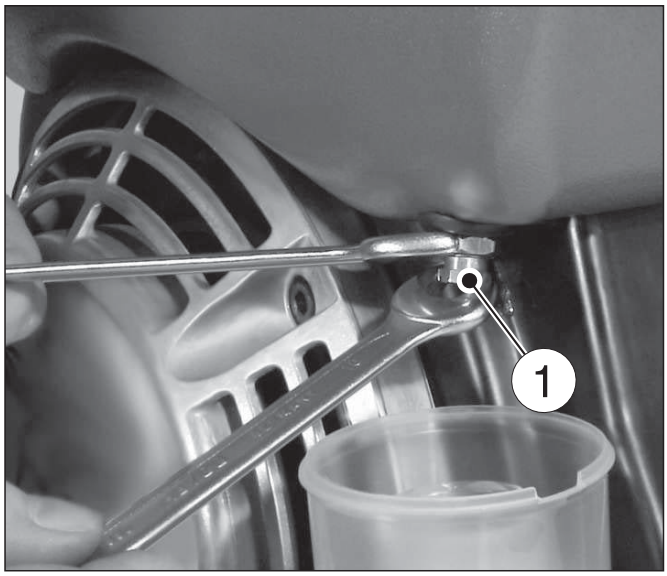

33

– Loosen hexagon screw „1“ with approx. 3-4 rotations.

– Trap the drops which emerge in a transparent vessel. Since water has a greater specific gravity than diesel fuel, the water emerges before the diesel fuel. The two substances separate at a clearly visible line.

– As soon as diesel only emerges at screw „1“, this can be tightened again.

If an external water trap is attached, check its water content every day, when the engine oil level is checked. The water which has collected is separated at a clearly visible line from the diesel fuel above it.

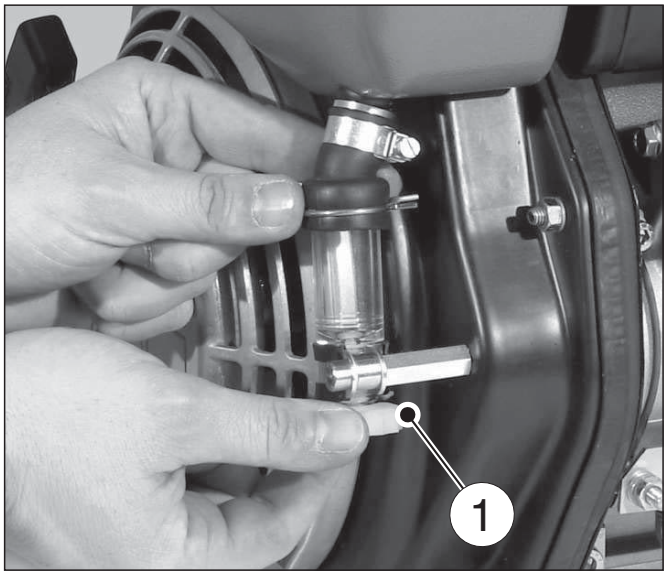

34

– Open drain plug „1“ and drain the water out into a suitable vessel.

– If the drain plug is difficult to reach, an extension hose can be attached to it.

5.3. Maintenance every 250 operating hours

5.3.1. Oilbath air cleaner maintenance

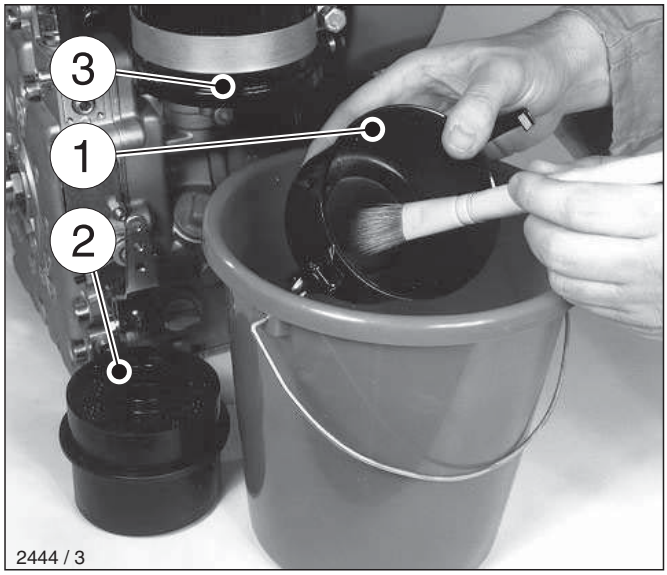

35

Trap the old oil and dispose of it in accordance with local legislation.

– Take off the oil tank „1“.

– Remove contaminated oil and sludge from the oil tank, and clean it out.

– Rinse out filter element „2“ in diesel oil; allow it to drip thoroughly and wipe it down before re-assembling the air cleaner.

– If severely contaminated, clean filter housing „3“.

Never attempt to repair the oilbath air cleaner by welding, brazing etc., as this could damage the filter beyond repair and cause engine damage.

– Re-attach parts previously removed from the air cleaner and add oil so that it is ready for use, Chapter 4.1.2.

Version with cyclone-type dust trap

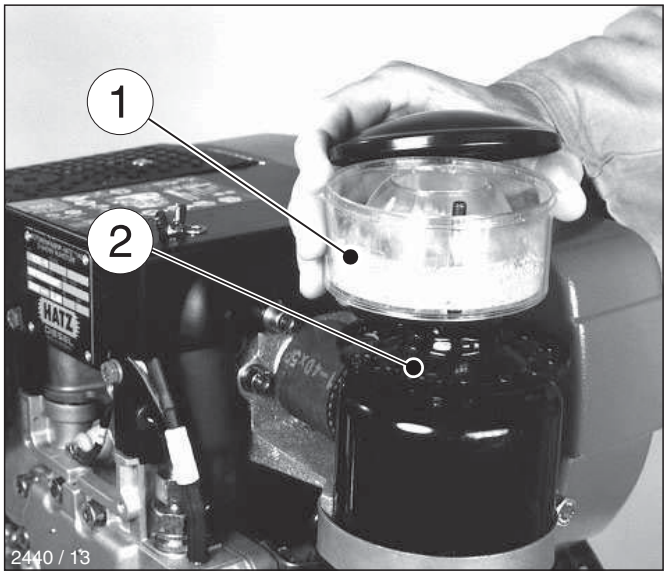

36

– Take off dust collector „1“, empty it and wipe clean (dust collector must remain dry).

– Clean intake aperture „2“ (also keeping it dry).

Important:
Do not add any oil to the dust collector.

– Attach the cyclone-type dust trap and secure with the wing nut.

5.3.2. Changing engine oil

The engine must be standing level and be switched off.
Only change the oil when the engine is warm.

Danger of scalding from hot oil!
Trap the old oil and dispose of it in accordance with local legislation.

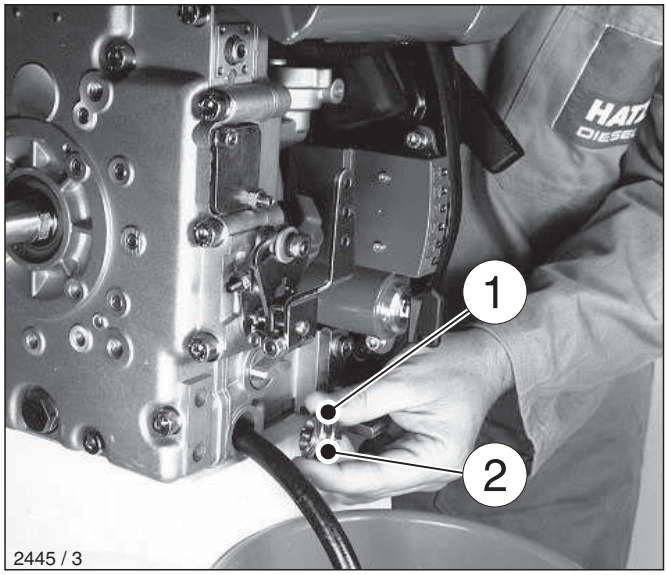

37

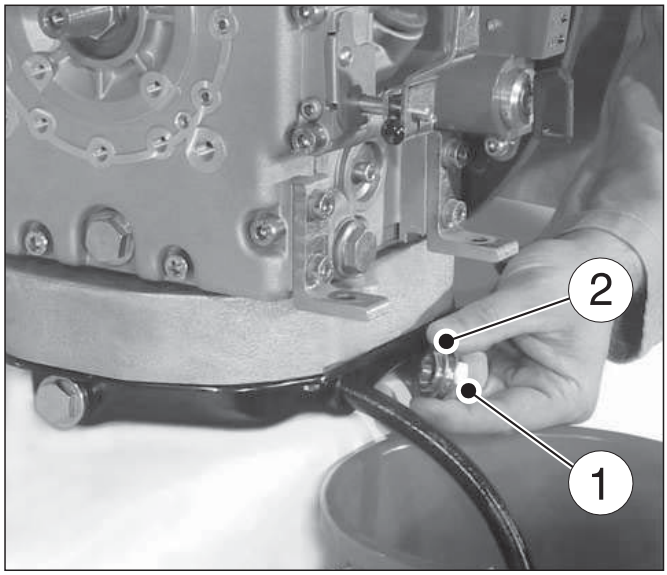

38

– Take out oil drain plug „1“ and allow the oil to drain out, Fig. 37 without oil sump, Fig. 38 with oil sump.

– Clean the oil drain plug „1“, fit a **new** washer „2“, insert and tighten.
Tightening torque: 50 Nm.

– Add engine oil, Chapter 4.1.1.

5.3.3. Checking and adjusting valve clearances

Remark:
Following steps are inapplicable in case equipment is with automatic tappet clearance compensation.
Identification characteristic is maintenance plan, chapter 5.1.

Only carry out adjustments when the engine is cold (10 - 30 °C).

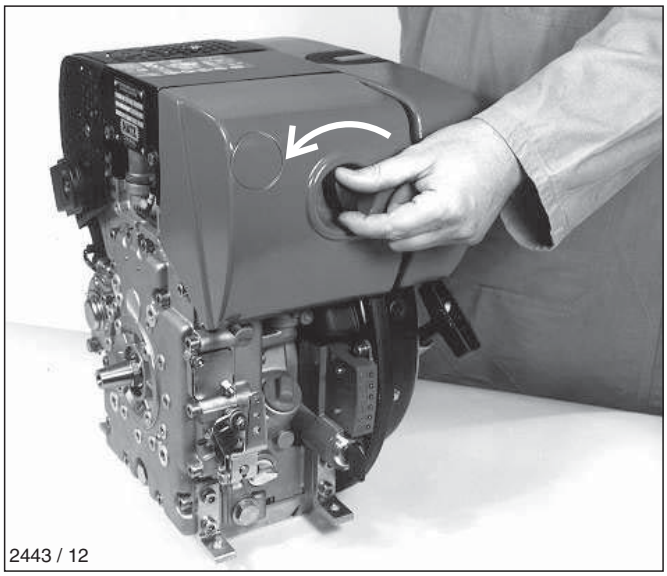

39

– Remove cover to air filter.

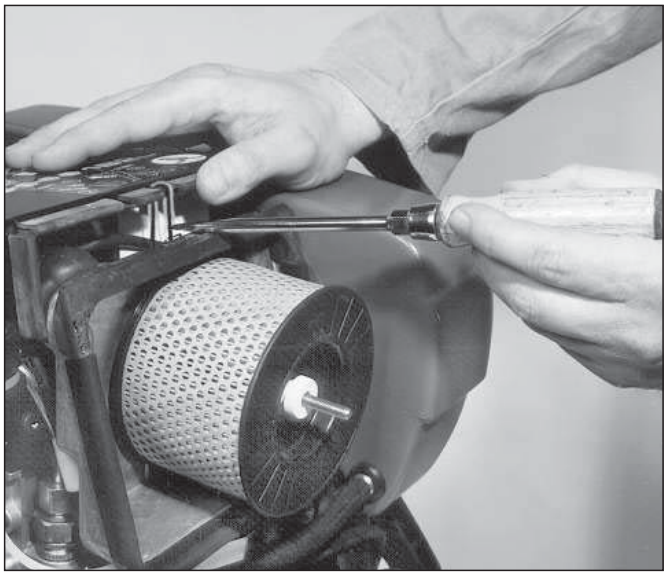

40

– Remove noise insulating hood.

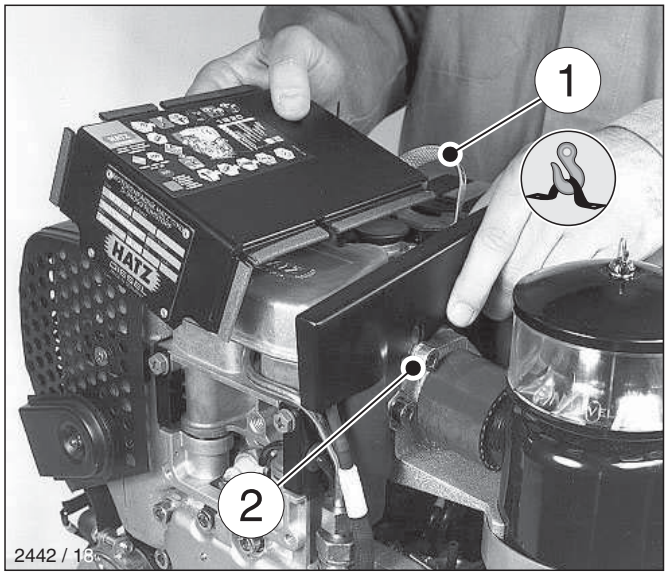

41

– On version with oilbath air cleaner, remove screw „2“ and take off cover plate with noise-insulating hood.

– Remove any contamination adhering to the cover for the cylinder head.

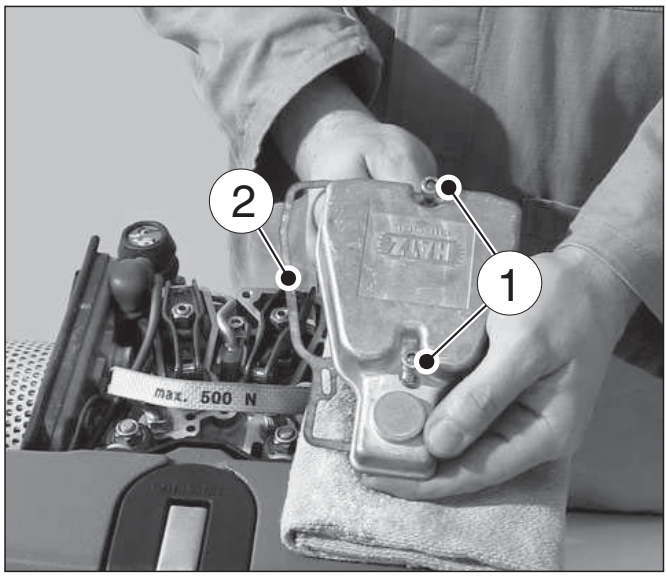

42

– Remove screws „1“ and take off the cylinder head cover with gasket „2“.

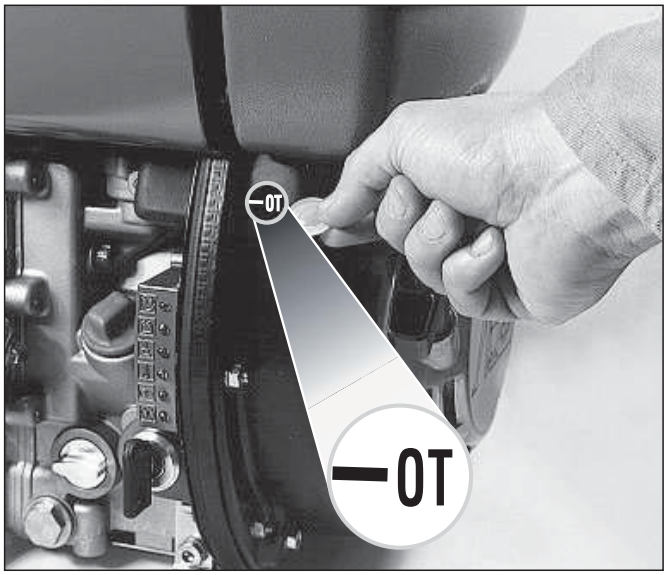

43

– Remove rubber cap from the inspection hole cover.

– Turn the engine over in the normal direction of rotation until the valves are in the overlap position (exhaust valve not yet closed, inlet valve starts to open).

– Turn the crankshaft through 360° in the normal direction of rotation and align exactly to the **OT**-marking.

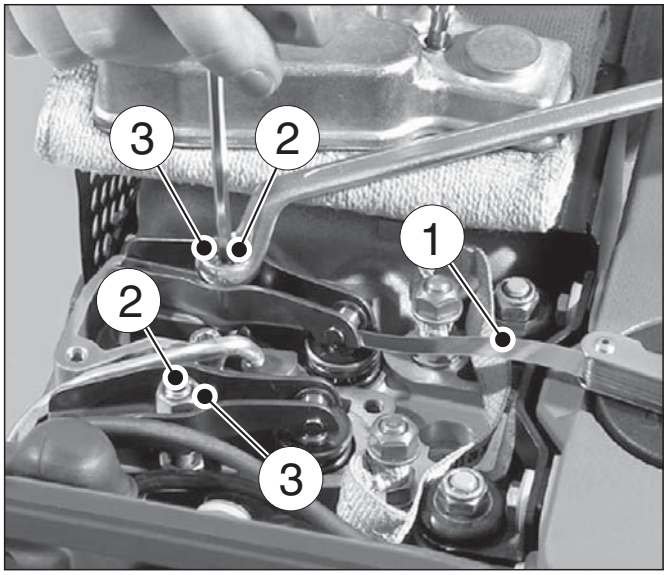

44

– Check valve clearances with feeler gauge „1“ (0.10 mm).

– If valve clearances require adjusting, slacken off screw „2“ and turn hex nut „3“ until feeler gauge „1“ can be pulled through with just slight resistance when screw „2“ is retightened.

– Fit cover for cylinder head and tighten evenly, always using a new gasket.

– Re-attach parts previously removed from engine.
Do not forget: replace the rubber cap at the inspection hole cover.

– Carry out a brief test run, then check the cover for leaks.

5.3.4. Cleaning cooling air area

⚠ **The engine must be switched off and cooled down before cleaning!**

– If severely contaminated, clean the cooling fins on the cylinder and cylinder head, and also the fan blades in the flywheel. If necessary, contact your local HATZ service station.

5.3.5. Checking screw connections

– Check the tightness of all threaded connections and take up slack if necessary, provided that these can be reached during maintenance work.
Do not tighten the cylinder head bolts.

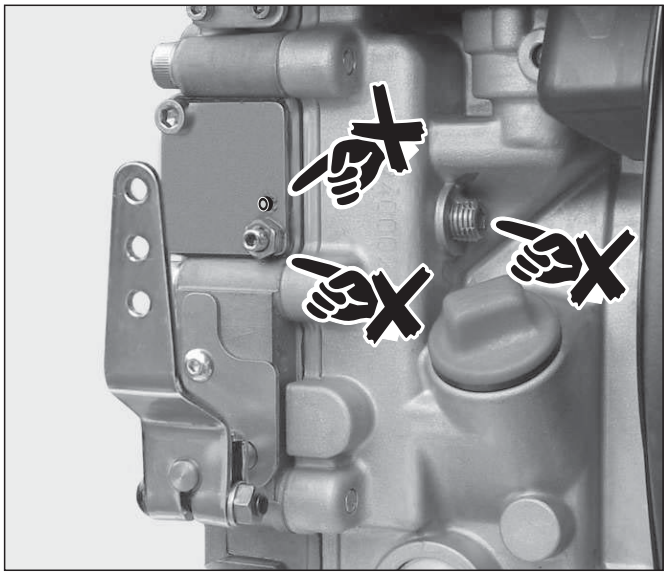

45

⚠ **The adjusting screws at the engine governor and on the injection system are sealed with lacquer and are not to be tightened or adjusted.**

5.3.6. Cleaning the exhaust mesh inlet

⚠ **Exhaust system components will naturally be hot and must not be touched while the engine is running or until it has cooled down after being stopped.**

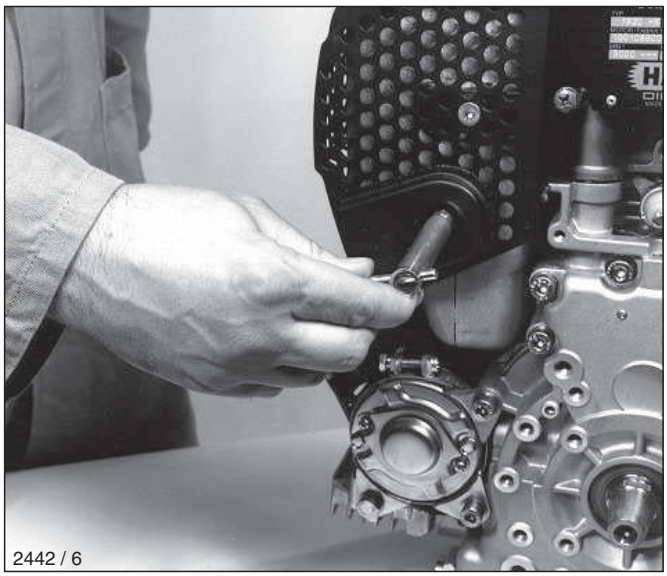

46

– Unscrew hex nut and remove the exhaust mesh insert.

– Remove any deposits in the mesh insert by means of a wire brush.

– Check the exhaust mesh insert for cracks or damage and, if necessary replace with a new one.

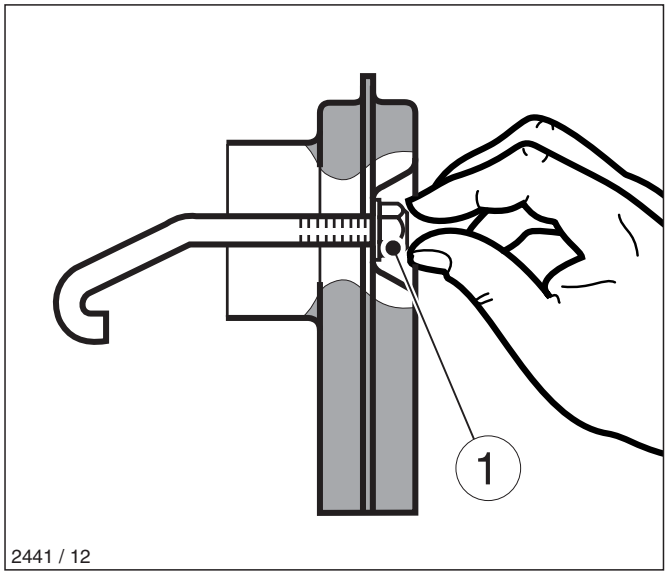

47

– Screw on hexagon nut „1“ by approx. 1 turn.

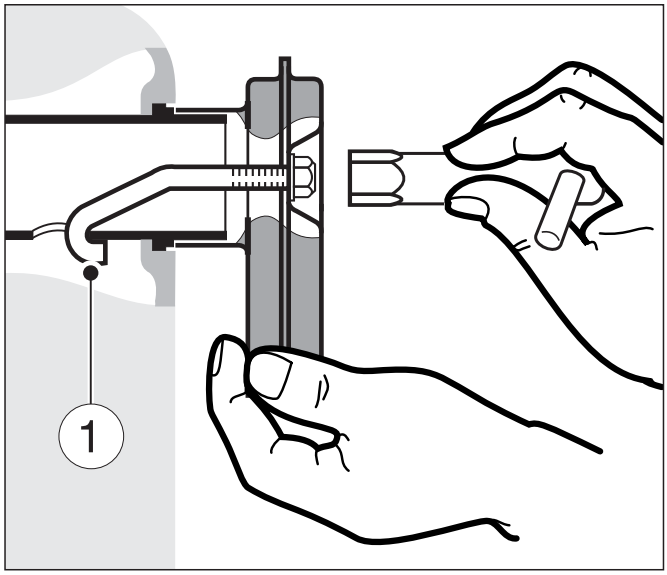

48

– Insert exhaust screen with hook „1“ into hole, them pull outwards again so that the hook is retained.

– Tighten the hexagon nut fully.

5.4. Maintenance every 500 operating hours

5.4.1. Renewing fuel filter

The maintenance intervals for the fuel filter are dependent upon the purity of the diesel oil being used and, if necessary, may have to be reduced to 250 hours.

When working on the fuel system, do not expose it to naked flames; do not smoke.

Important!
Keep the entire area clean so that no dirt reaches the fuel. Fuel particles may damage the injection system.

Model with double fuel filter system

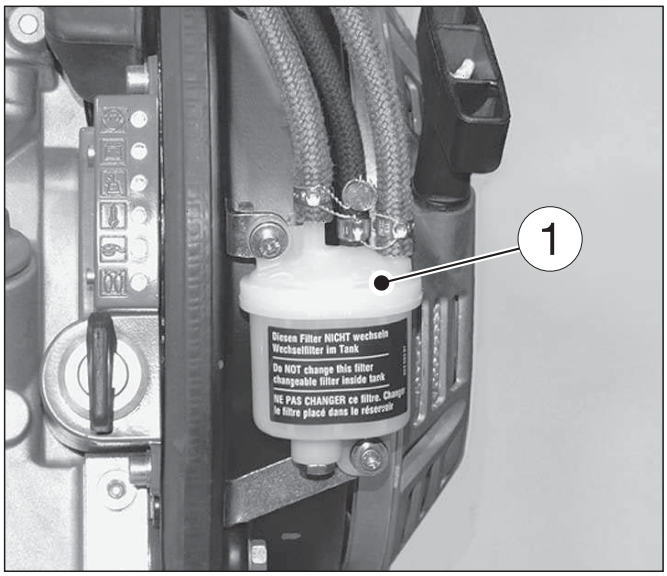

49

This system consists of a maintenance-free external filter „1“ (Fig. 49) and a replaceable-cartridge filter which is installed in the tank (Fig. 50). The advantage of this system consists in retaining dirt particles which might get into the fuel system on filter replacement, upstream of the following external filter, so that they cannot endanger the injection system.

Important!
This external filter must not be replaced. Only replace the fuel filter installed in the tank!

Model with fuel filter in fuel tank

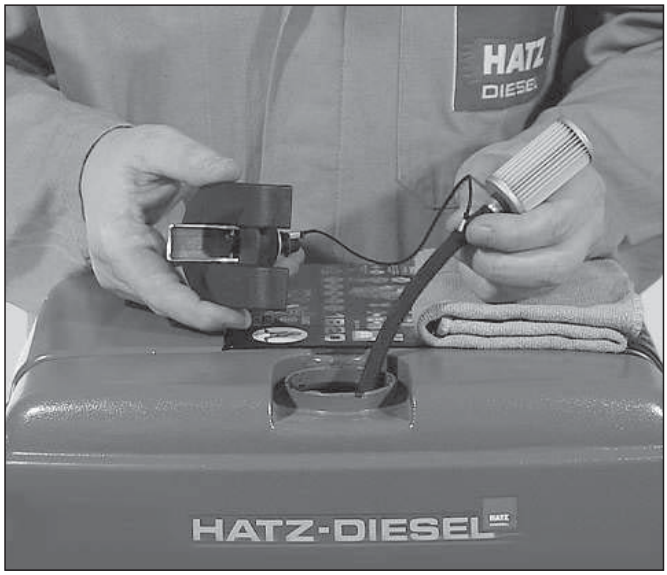

50

– Open the tank cover and pull the fuel filter out of the tank by its cord.

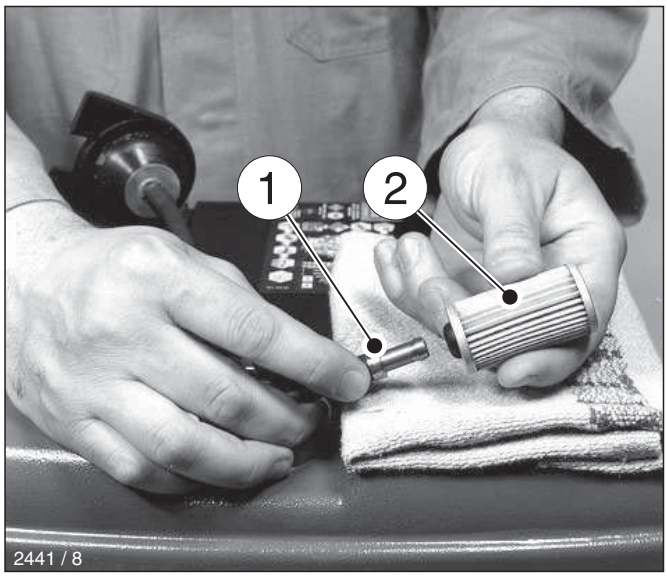

51

– Pull fuel supply line „1“ off fuel filter „2“ and insert a new filter.

– Fit the fuel filter again and close the tank cap. Bleeding of the fuel injection system takes place automatically.

Model with external fuel filter
(no fuel filter in the tank)

– Empty the fuel tank by taking out screw „1“, Fig. 33 or Fig. 34 and allow the fuel to drain into a clean vessel. This fuel can be re-used later.

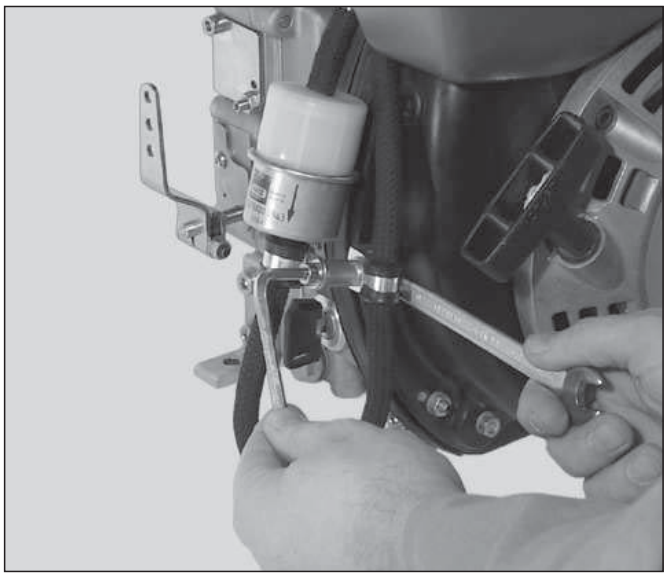

52

– Unscrew the fuel filter from its mount.

– Place a suitable vessel under the filter to trap the residual fuel.

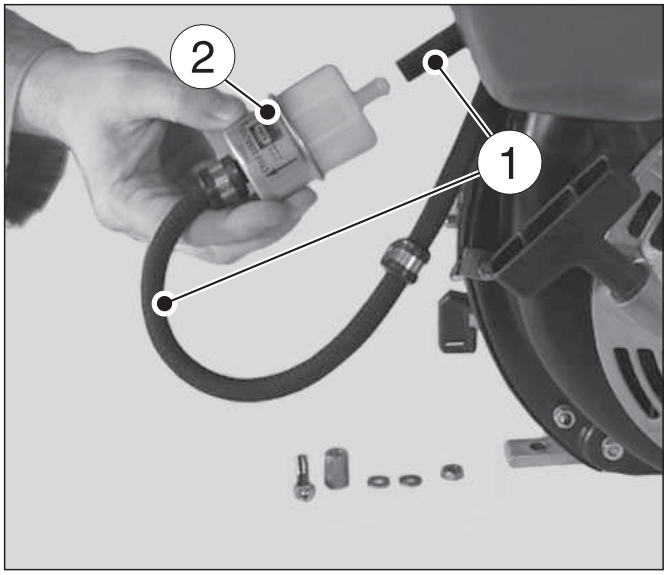

53

– Pull off fuel supply line „1“ at both ends of fuel filter „2“ and insert the new filter.

– Always renew the fuel filter. Note the arrows indicating the correct direction of flow.

– Secure the filter to its mount.

– Fill the fuel tank with diesel oil; Chapter 4.1.3. Air is vented from the fuel system automatically.

– Check the fuel filter and lines for leaks after a short test run.

5.4.2. Air cleaner maintenance

The filter cartridge should only be cleaned when the maintenance lamp lights at maximum speed, Chap. 5.2.3.
However, the filter cartridge should always be replaced after 500 operating hours at the latest.

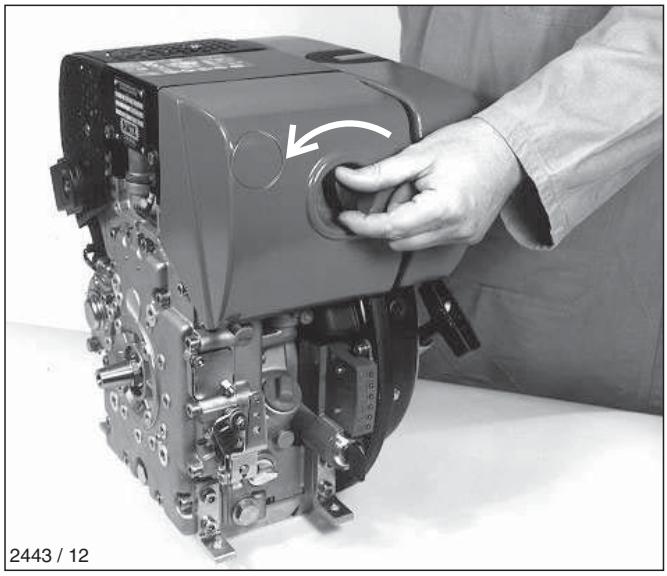

54

– Remove the air cleaner cover.

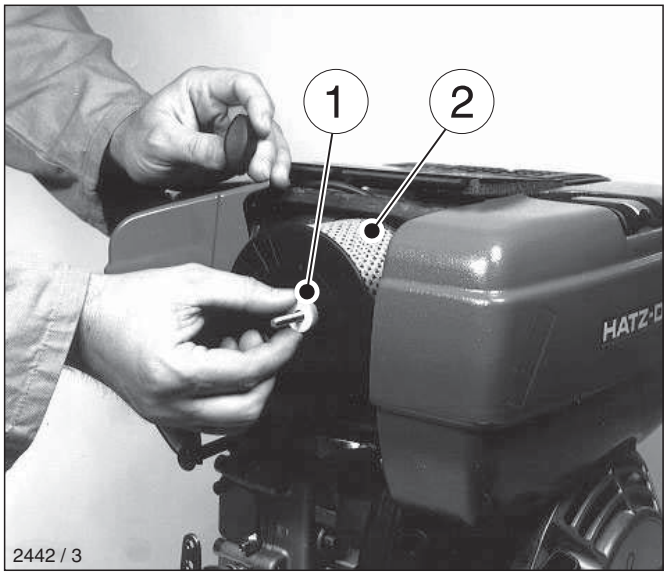

55

– Unscrew and remove knurled nut „1“ and take off air cleaner element „2“.

– Clean the filter compartment and the cover. Dirt and other foreign bodies must not be allowed to enter the engine's air inlet points.

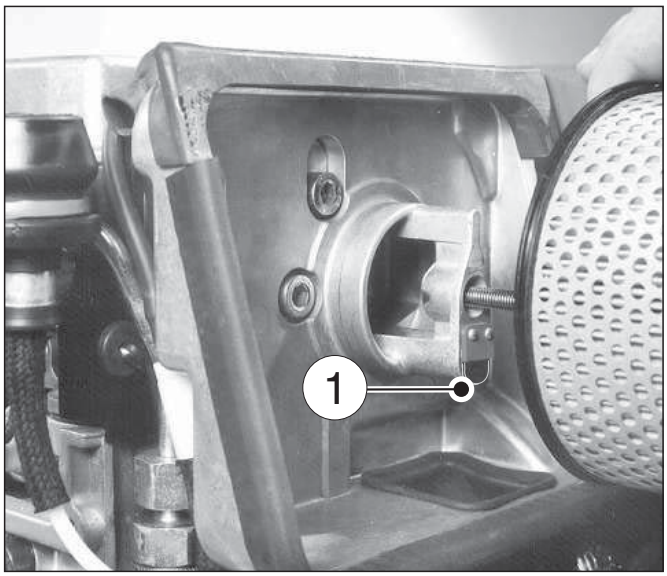

56

– On versions with a mechanical air cleaner service indicator, check the condition and cleanliness of valve plate „1“.

– The filter cartridge should either be renewed or, depending upon the degree of contamination, cleaned, or checked, as follows:

Cleaning the filter cartridge

Dry contamination

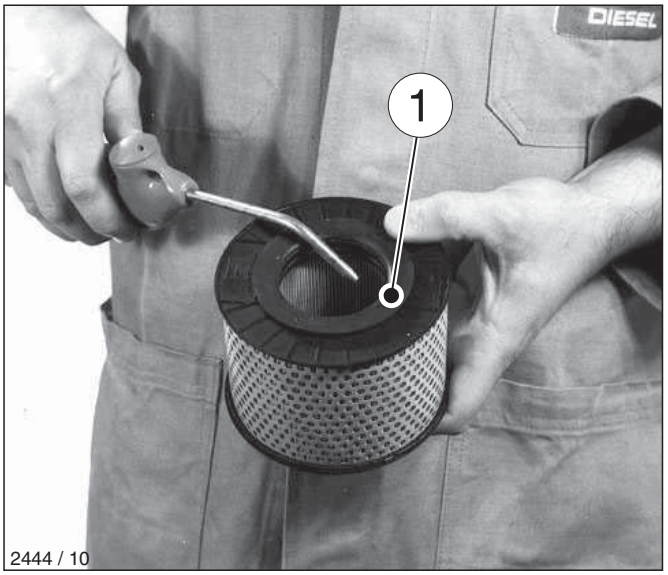

57

Use compressed air to blow through the filter cartridge from the inside outwards, until no further dirt emerges.

Important!
The pressure must not exceed 5 bar.

Persons handling compressed air must wear protective goggles.

Moist or oily contamination
Renew the filter cartridge.

Checking the filter cartridge

– Check filter cartridge's gasket surface „1“ for damage, Fig. 57.

– Check the filter cartridge for cracks or any other type of damage to the paper filter by holding it inclined towards the light or by shining a light source through it.

Important!
The slightest damage to the paper filter rules out it being used any longer.

– Re-assemble the filter cartridge in the reverse order of work.

5.5. Maintenance every 1000 operating hours

5.5.1. Cleaning the oil filter

The oil filter should be cleaned at the same time as the engine oil is changed, since oil escapes when the filter is removed.

The engine must be standing horizontally and switched off.

Danger of scalding from hot oil ! Trap the old oil and dispose of it in accordance with local legislation.

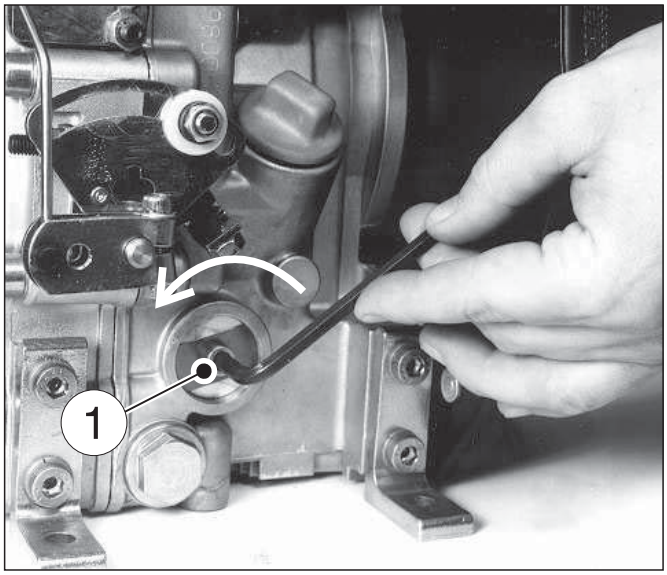

58

– Loosen screw „1“ with approx. 5 rotations.

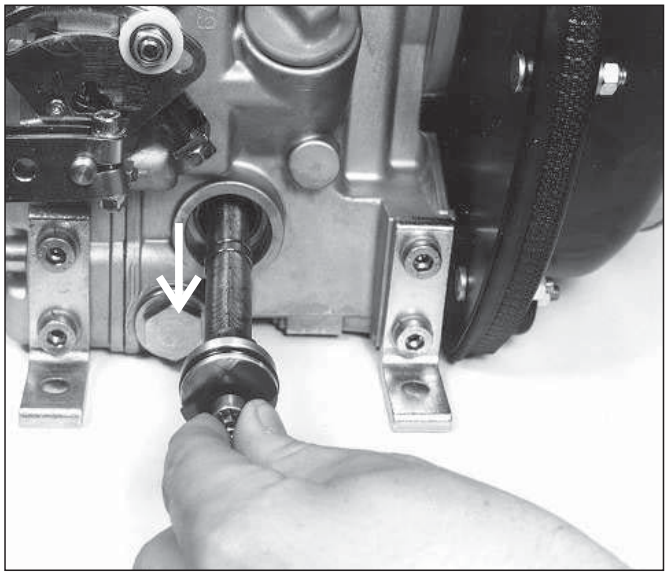

59

– Remove oil filter from housing.

60

– Use an air line to blow out oil filter dirt from the inside outwards.

Persons handling compressed air must wear protective goggles.

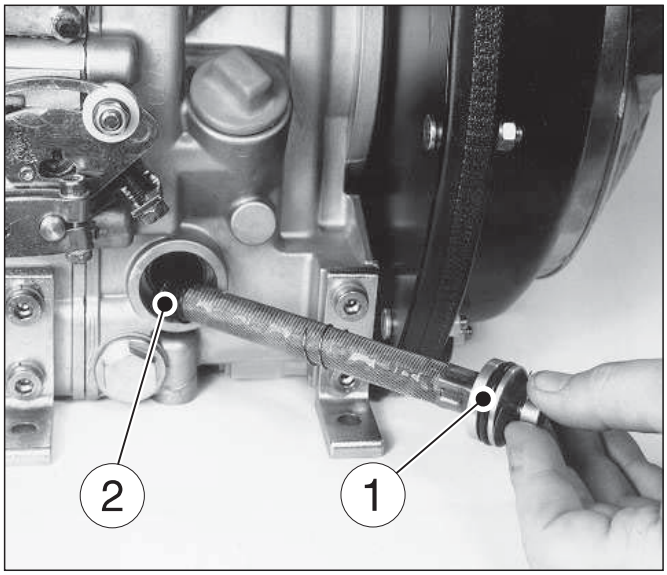

61

– Check joint washer „1“ whether it is damage; replacement if necessary.

– Check joint washer „2“ whether it is damage and correctly fitted, replace oil filter if necessary.

– Lubricate joint washer before fitting.

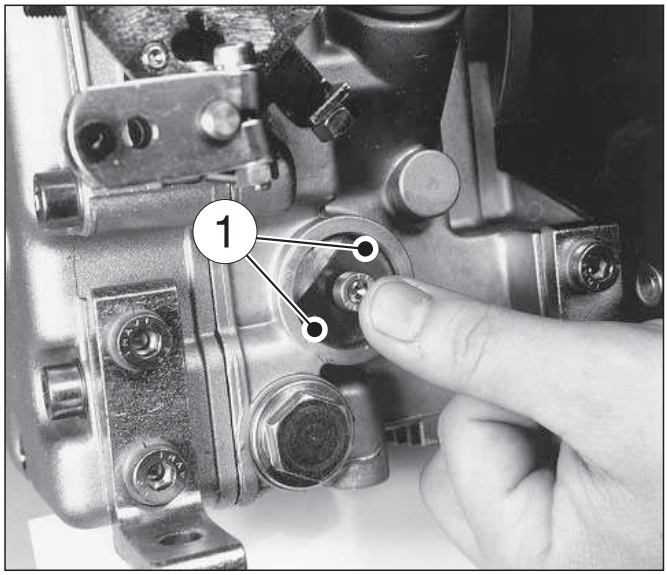

62

– Put in oil filter and press until limit stop.

– Check whether tension springs sit close to oil filter with both ends „1“, before tightening screw.

– Check the oil level and restore to the **max.** level if required, Chapter 4.1.1.

6. Malfunctions – causes and remedies

Malfunctions	Possible causes	Remedy	Chap.
6.1. Engine does not start, or not immediately, but can be turned over easily as usual.	Speed control lever in stop or idle position.	Move lever to START position.	4.2.1.
	Engine shutdown pin in STOP position.	Move to operating position by pulling the pin gently.	4.3.
	No fuel in the injection pump.	Add fuel. Systematically check the entire fuel supply system: If still no fault found, - check engine feed line - check fuel filter	4.1.3. 5.4.1.
	Insufficient compression: - Incorrect valve clearance.	Check valve clearances, adjust if necessary.	5.3.3.
	- Cylinders and/or piston rings worn.	See workshop manual.	
	Injector not functioning.	See workshop manual.	
At low temperatures.	Below starting threshold temperature.	Operate preheater (optional extra).	4.2.3.
	Equipment not disengaged.	Disengage engine from equipment, if possible.	
	Preheating system faulty (optional extra).	See workshop manual.	
	Fuel has inadequate resistance to low temperatures.	Check whether clear (not turbid) fuel emerges at the fuel line detached from the injection pump. If turbid or separated - either warm up the engine or drain the complete fuel supply system. Refill with winter-grade fuel to which paraffin has been added.	4.1.3.

Malfunctions	Possible causes	Remedy	Chap.
At low temperatures:	Starting speed below 400 min^{-1} - Viscosity of oil too high.	Change lubricating oil and add oil of the correct viscosity class.	5.3.2. 4.1.1.
	- Battery charge too low.	Check the battery, if necessary contact a service station.	7.
If equipped with a stop solenoid or automatic electrical shutdown system (additional equipment)	Solenoid faulty and/or fault in the electrical system.	See workshop manual.	
6.2. Engine fires but does not run.	Speed control lever not moved far enough towards „START“.	Move lever to „START“ position.	4.2.1.
	Equipment not disengaged.	Disengage engine from equipment if possible.	
	Fuel filter blocked.	Renew fuel filter.	5.4.1.
Automatic electrical shut-off device (optional extra)	One of the automatic shutdown's monitoring elements has initiated a stop signal. (See also Chapter 6.4.)	Localise the monitoring element responsible and clear the fault, or contact a HATZ service station.	
6.3. Starter motor does not operate or engine does not turn over.	Fault in the electrical system: - Battery and/or other cables incorrectly connected up. - Cable connections loose and/or oxidised. - Battery faulty and/or flat. - Starter motor faulty. - Faulty relays, monitoring element.	Check electrical system and its component. See also the workshop manual.	7.

Malfunctions	Possible causes	Remedy	Chap.
6.4. Engine cuts out of its own accord during operation.	Fuel supply interrupted - Tank has run empty. - Fuel filter blocked. - Tank venting inadequate. - Air in the fuel system.	 Add fuel. Change fuel filter. Ensure adequte tank venting. Check fuel system for penetration of air. Check air vent valve.	 4.1.3. 5.4.1.
	Mechanical faults.	Contact a HATZ service station.	
Automatic electrical shut-off device (optional extra)	One of the automatic shutdown's monitoring elements has initiated a stop signal.	Localise the monitoring element responsible and clear the fault, or contact a HATZ service station.	
	Monitoring element for: - oil pressure too low - engine temperature too high - defective alternator.	 Check oil lubrication. Check air cooling zone for contamination. See workshop manual.	 5.2.1. 5.3.4.
6.5. Engine output and speed both drop.	Fuel supply interrupted: - Tank has run empty. - Fuel filter blocked. - Tank breathing inadequate. - Air in the fuel system. - Speed control lever does not remain in desired position.	 Add fuel. Change fuel filter. Provide adequate tank breathing. Check fuel system for penetration of air. Check air vent valve. Lock the lever into position.	 4.1.3. 5.4.1.
6.6. Engine output and speed fall, black smoke from exhaust.	Air cleaner contaminated. Valve clearances incorrect. Injector not functioning.	Clean or renew the air cleaner. Adjust valve clearances. See workshop manual.	5.3.1. 5.4.2. 5.3.3.

Malfunctions	Possible causes	Remedy	Chap.
6.7. Engine becomes very hot. Indicator lamp for cylinder temperature (optional extra) comes on.	Too much lubricating oil in engine.	Drain off lubricating oil as far as upper mark on dipstick.	5.3.2.
	Inadequate cooling: - Contamination of entire cooling air zone.	Clean cooling air zone.	5.3.4.
	- Air duct panels not properly sealed.	Check cooling air deflector plates and shafts for completeness and airtight seal.	
6.8. Moisture condensate emerging from exhaust.	Operation off load for a prolonged period.	Operate the machine at about 70 % load until moisture no longer emerges from the exhaust.	

7. Work on the electrical system

Batteries generate explosive gases. Keep them away from naked flame and sparks which could cause them to ignite.
Do not smoke.
Protect eyes, skin and cloth against the corrosive battery acid. Pour clear water over acid splashes immediately. In case of emergency call doctor.
Do not place any tools on top of the battery.

Always disconnect the negative (–) pole of the battery before working on the electric device.

– Do not confuse the **positive (+)** and **negative (–)** terminals of the battery.
– When **fitting** the battery, first connect up the **positive lead**, then the **negative lead**. **Negative terminal to earth = engine block.**
– When **removing**, first disconnect the **negative lead**, then the **positive lead**.
– Always take care to **avoid short-circuits** and earth (ground) contact of live cables.
– If malfunctions occur, first of all **check** that **cable connections** make good contact.
– Replace a failed indicator light without delay.
– **Do not remove the ignition key** while the engine is running.
– **Do not disconnect the battery** while the engine is running.
Electric voltage peaks can cause damage to electrical components.
– In case of an **emergency start in manual mode**, leave the battery (which might be discharged) connected to the engine.
– Before starting **emergency operation without battery**, proceed as follows before starting:
  - disconnect plug-connection to voltage regulator for engine models with **mounted instrument box (picture 25)**.Turn key to **off-position (0)** and remove.
  - disconnect plug-connection to instrument box for engine models with **external instrument box (picture 26).**
– Do not splash electrical device with water jet or pressure jet during engine cleaning.
– When carrying out **welding work** on the engine or equipment, fit the earth clip of the welding equipment as close to the welding point as possible and **disconnect the battery**. The connecting plug for the voltage regulator must be removed.

The relevant circuit diagrams are enclosed with the engine if it is equipped with an electrical system. Additional circuit diagrams can be supplied to order.

HATZ assumes no liability for electrical systems which was not carried out acc. HATZ circuit diagrams.

8. Storage out of use

The new engine can normally be stored dry for up to one year.
In very humid climates or coastal regions, the protective treatment is sufficient for up to about 6 months.
For longer periods of storage, please contact your nearest **HATZ service station**.

CALIFORNIA

Proposition 65 Warning

Diesel engine exhaust and some of its constituents are known to the State of California to cause cancer, birth defects, and other reproductive harm.

B Circuit diagram

Circuit diagram

C Hydraulic plan

Hydraulic plan